shindaiwa®

OWNER'S AND OPERATOR'S MANUAL

Diesel Engine Generator

DGM60MK

Vertical, Water-Cooled 4-Cycle Diesel Engine

CAUTION
Do not operate the Generator, or any other appliance, before you have read and understood the instructions for use and keep near for ready use.

DGM60MK/LU
X750-020 73 0
X750801-370 0

Introduction

Thank you for purchasing this Shindaiwa soundproof diesel engine generator.

- This manual has been created to ensure safe usage of this generator. Be sure to read this manual before operation. Improper operation/handling of this generator will result in an accident or malfunction.

- Handling/Operation of this generator can only be performed by persons who understand the contents of this manual and can handle/operate the generator in a safe manner. Persons who suffer from an illness, are taking medicine or not feeling way such that safe operation would be negatively affected must not operate this generator.

- Work performed using this generator and handling/operation of this generator must be in accordance with corresponding laws and regulations based on such laws. Consult with the authorized distributor where this generator was purchased if you have any inquiries regarding the corresponding laws.

- Always be sure to include this manual when loaning out this generator and instruct operating personnel to read this manual before operation.

- Store this manual in a specified location where it will be secure and available for consulting at any time. Order another copy from the authorized distributor where this generator was purchased if this manual becomes dusty, grimy or torn.

- Consult with the authorized distributor where this generator was purchased if you have any inquiries regarding any points related to this generator and manual.
  When inquiring about this generator, be sure to provide the model name and serial number.

- If disposing of this generator, do so in a manner that is in compliance with laws related to industrial waste. Contact the authorized distributor where the generator was purchased if you have any inquiries regarding proper disposal.

■ Caution notice ranks in this manual are classified as follows.

⚠ **WARNING** :	Indicates a potentially hazardous situation which, if not avoided, can result in death or serious injury
⚠ **CAUTION** :	Indicates a potentially hazardous situation which, if not avoided, can result in minor or moderate injury and property damage.
< NOTE > :	Other types of cautions and indications.

- Note that ⚠ **CAUTION** items can also lead to major accidents under some circumstances if not correctly followed.
  All caution notices are important. Be sure to follow all of them.

Table of Contents

1. Safety Instructions

WARNING : EXHAUST GAS POISONING

- Do not operate the generator in poorly ventilated areas such as indoors or tunnels, as the exhaust gas of the engine contains substances that are harmful to human health.
- Do not direct exhaust fumes at bystanders or buildings.

WARNING : ELECTRIC SHOCK

- Before connecting or disconnecting load cables to/from the output terminal, always turn the output circuit breakers to the OFF position, stop the engine, and remove the ignition key.
- Close the output terminal cover before operating.
- Do not insert a pin, wire or other metal object into the electrical outlet.
- Do not touch the generator if the generator or casing becomes wet during operation.
- Do not touch output terminals or internal electric parts while the generator is operating.

WARNING : INJURY

- Close all doors and lock them during operation.
- Do not open the check door during operation. Be careful of pinching or catching of moving parts such as the cooling fan and fan belt.
- Always be sure to stop the engine and remove the engine key when performing inspection or maintenance.
- Do not suspend using tie downs. Use of such could result in the generator falling.
- Do not lift any additional weight such as fuel tanks or trailers.
- No persons should be under a suspended generator.
- Always be sure to check that the breakers on load side and switches for any equipment using the generator are at OFF before turning the breaker to ON. Also be sure to advise personnel on the load side that power will be turned on or off before operating the breaker.
- Do not use the fuel tank lifting hook to suspend a gas tank that contains fuel, and do not suspend with the fuel tank and spill containment as a single unit. Doing so could result in the tank falling.

CAUTION : EYE/SKIN INJURY

- Wear rubber gloves and other protective wear to protect eyes, skin and clothing from the battery fluid which contains diluted sulfuric acid. If the battery fluid contacts eyes or skin, wash out immediately with a sufficient amount of clean water. Be sure to receive medical treatment, especially if the fluid contacts the eyes.

CAUTION : EXPLOSION

- Never use or recharge the battery if the fluid level is below the minimum level.
- Do not create sparks or bring flame near the battery as it generates flammable gas.

CAUTION : FIRE

- Do not bring flammable items (such as fuel, gas and paint) or items that are highly combustible near the generator as the muffler, exhaust gas and other parts become extremely hot.
- Position this generator 3 ft. (1 m) or more from walls or other hindrances, and on a level surface.
- Do not connect the generator output to indoor wiring.
- This generator uses diesel fuel. Always be sure to stop the engine and not bring flames close when inspecting fuel or refueling. Wait until the engine has cooled before performing such procedures.
- If fuel spills, always be sure to open the spill containment drain valve and drain off the spilled fuel.
- If fuel or oil is leaking, repair the leaking location before operating.
- Always be sure to wipe up any spilled fuel or oil.
- Allow the generator to cool before covering with the protective cover.
- Never allow flame to come close to the generator.

CAUTION : BURNS

- Do not touch the engine and surrounding components immediately after stopping the engine as they are still hot.
- Do not open the radiator cap immediately after stopping the engine. Doing so will result in hot steam gushing out.
- Hot steam gushes out from the coolant sub-tank if the generator overheats. Do not touch the coolant sub-tank.
- Always be sure to stop the engine and allow the engine to cool when performing inspection or maintenance of engine oil. Opening the oil gauge or oil filler cap during operation will result in hot oil gushing out.

CAUTION : INJURY

- Always be sure to use lifting hooks when suspending the generator, and slowly lift it straight up.
- Personnel performing suspension work must wear protective gear such as helmets, safety shoes and gloves.
- Remove the wood ties if using anchors to secure the generator
- Position the generator on a level stable surface so that it cannot slide or move in any manner.
- Before starting operation, always be sure to turn off all switches of equipment using the generator and all breakers to OFF.
- Do not move the generator during operation.
- Do not operate the generator if it has been modified or any parts have been removed.

CAUTION : PROPERTY DAMAGE

- If using this generator for medical equipment, check before use with the medical equipment manufacturer, doctor, hospital or similar entity.
- Check that the generator output setting, output terminal connection and load power source are consistent.
- Cable burnout can occur due to generated heat if the load current exceeds the allowable current of the cable.
- The voltage drop between cables is large if the cable is excessively long or thin, resulting in decreased input voltage to equipment using the generator, thereby causing decreased performance, faulty operation and malfunction.

■ Warning/Caution Label Locations

If warning or caution labels become damaged and difficult to read, replace with new labels in the indicated locations. Order labels using part number indicated in the parenthesis.

①	Injury	(Part no. : X505-004630)
②	Simul-Phase	(Part no. : X505-006960)
③	Caution: gm spec LLC	(Part no. : X505-004650)
④	Caution: fire	(Part no. : X505-004880)
⑤	Caution: do not change	(Part no. : X505-004620)
⑥	Injury	(Part no. : X505-006970)
⑦	Danger caution	(Part no. : X505-004660)
⑧	Burn	(Part no. : X505-004400)
⑨	Spill containment bolt	(Part no. : M707-000380)
⑩	Terminal cover instructions	(Part no. : M704-002250)
⑪	Continuous output	(Part no. : M705-000650)

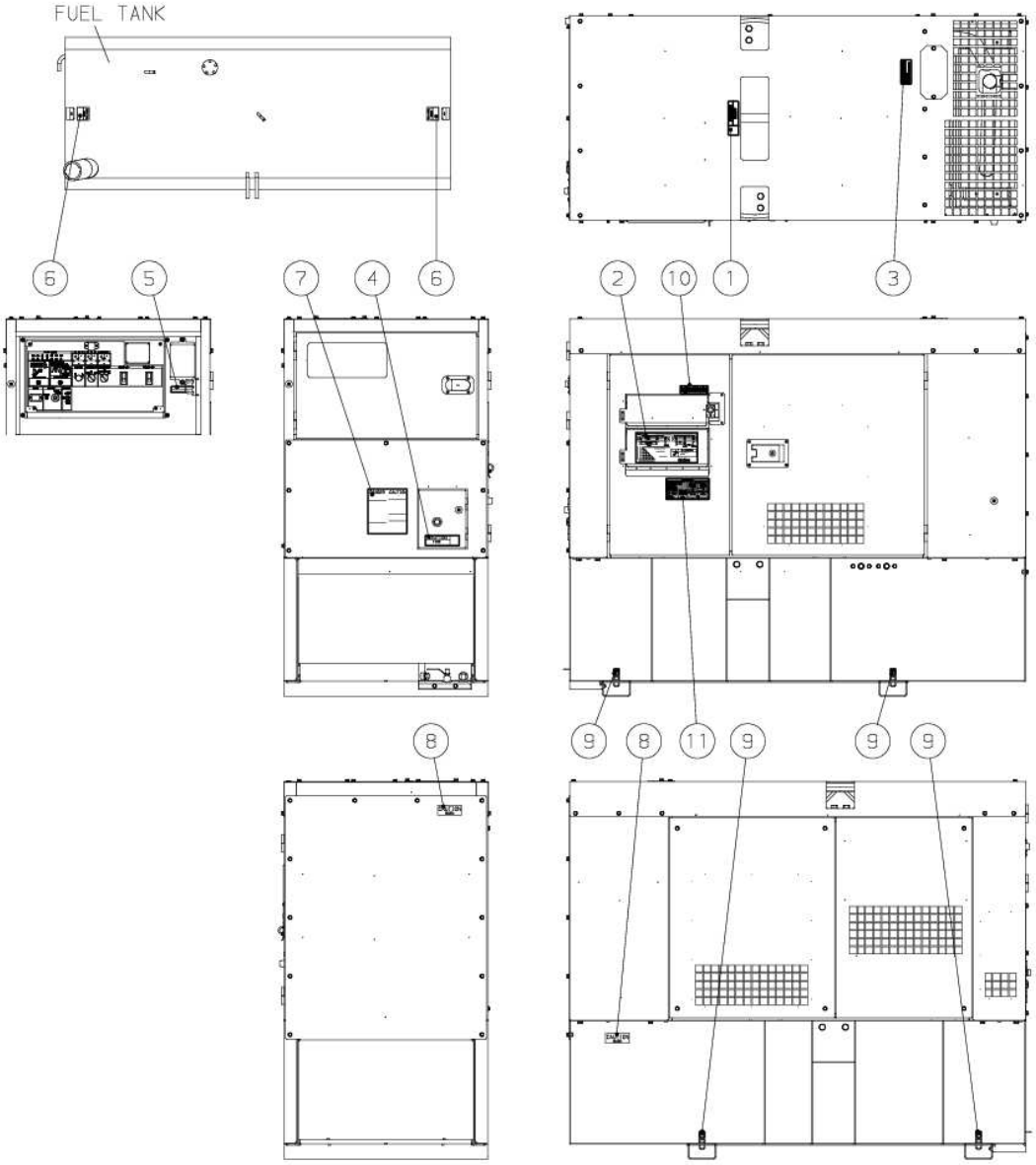

2. Specifications

2-1. Specifications

Model		Unit		DGM60MK/LU
Alternator	Generator Type	-		Revolving Field Brushless AC Simultaneous 3 Phase-120V/240V 1 Phase
	Rated Frequency	Hz		60
	Rated Output	Three phase	kVA	60
			kW	48
		Single phase	kVA	36/ [18] *1
			kW	36/ [18] *1
	Rated Voltage	Three phase	V	208/240/ [480] *1
		Single phase	V	120/139/240/[277] *1
	Rated Current	Three phase-208V	A	144
		Three phase-240V	A	144
		Three phase-480V	A	72
		Single phase-120V	A	150×2 [75 x 2]*1
		Single phase-240V	A	150 [75]*1
	Power Factor	-		Three phase 0.8, Single phase 1.0
	Insulation class	-		F
	Excitation	-		Self Excitation (brushless)
	No. of Poles	-		4
Engine	Type	-		Vertical Water-Cooled 4-Cycle Diesel
	Model(Manufacturer)	-		Kubota V3800DI-TI
	No. of Cylinders (bore × stroke)	(**in.**/mm)		4 (**3.94×4.72**/100×120)
	Continuous Rated Output	hp		77
	Rated Speed	rpm		1800
	Displacement	**Cu.in.**/liters		**230**/3.769
	Combustion System	-		Direct Injection (Turbo-charged)
	Cooling Method	-		Radiator
	Lubricating Method	-		Forced Lubrication
	Starting Method	-		Electric
	Fuel	-		No. 2-D EPA regulation
	Lubricating Oil	-		CF class or higher
	Fuel Tank Capacity	**gal.**/liters		**111**/420
	Lubricant Volume	**gal.**/liters		**3.5**/13.2 (including filter **0.1**/0.4)
	Cooling Water Volume	**gal.**/liters		**3.3**/12.5 (including sub-tank **0.4**/1.6)
	Starting Motor Capacity	V-kW		12-3.0
	Charging Alternator Capacity	V-W		12-960
	Battery Capacity	-		12V-92AH
Unit	Length	**in.**/mm		**78**/1970
	Width	**in.**/mm		**35**/880
	Height	**in.**/mm		**64**/1630
	Dry Weight	**lbs.**/kg		**2843**/1290
	Installed Weight	**lbs.**/kg		**3703**/1680

*1: Output is that shown in brackets if using with the 240/480-V switching function set to 480 V.

2-2. Ambient Conditions

Use this generator in ambient conditions as described below. Failure to provide these conditions can result in problems such as malfunction, insufficient output and reduced durability.

- Ambient temperature: 5 to 104 ℉ (-15 to 40 ℃)
- Relative humidity: 80% or less
- Elevation: 984 ft. (300 m) or less

3. Applications

- Power source for submerged pumps and similar civil engineering equipment
- Power source for lighting and similar equipment
- Power source for electrical tools and household appliances

CAUTION : PROPERTY/SECONDARY DAMAGE

- Do not use for any application other than those listed above.
- If using this generator for medical equipment, check before use with the medical equipment manufacturer, doctor, hospital or similar entity.

4. Part Names

4-1. External View/Part Names

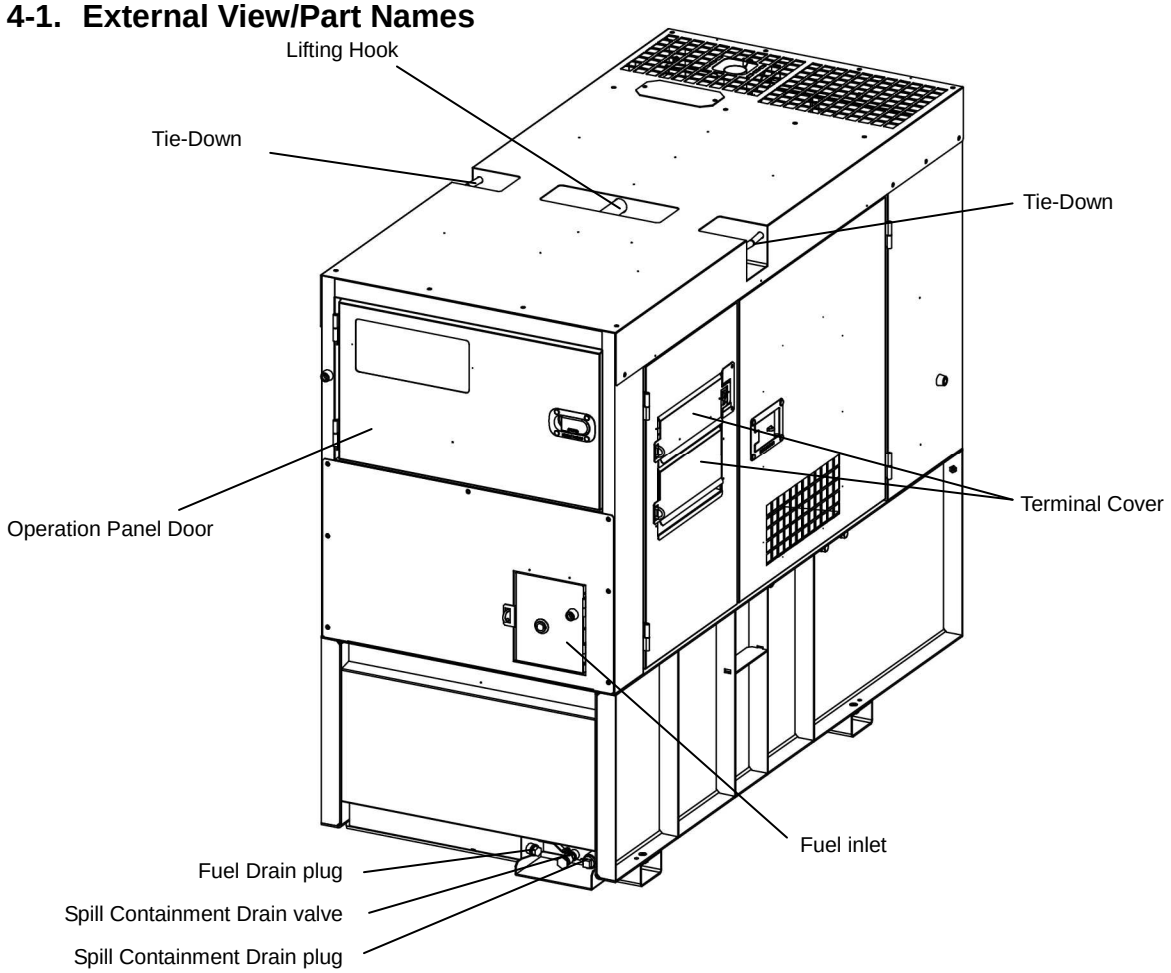

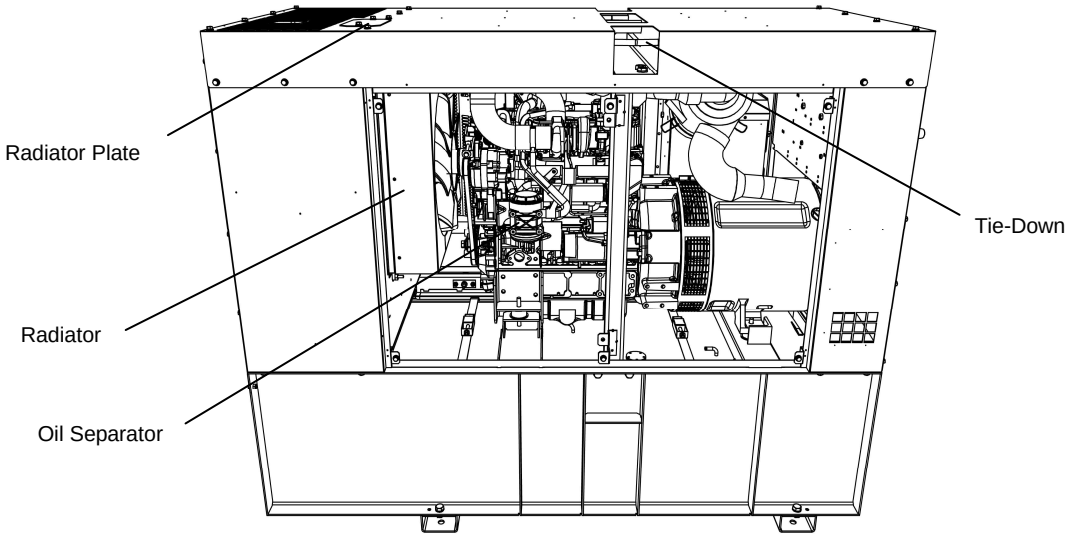

* Shown with side-plate removed.

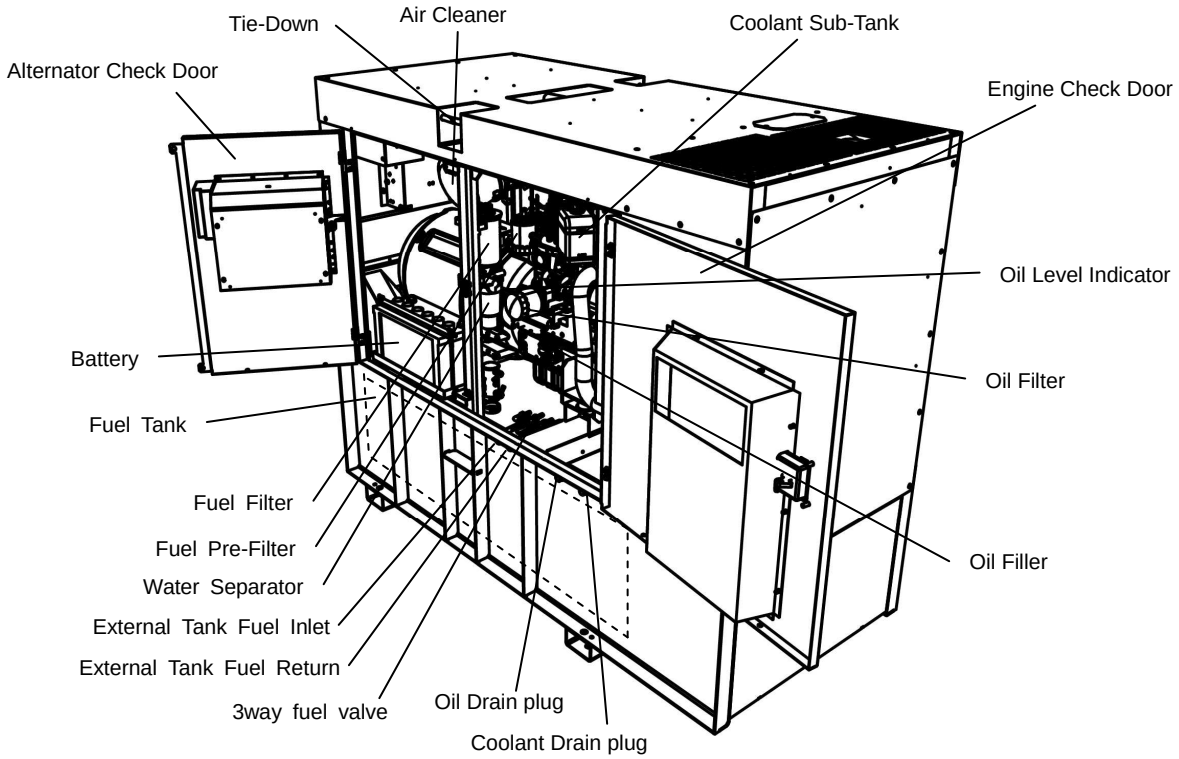

Accessories

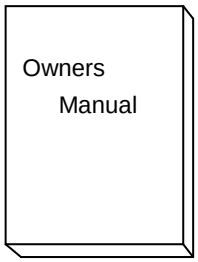

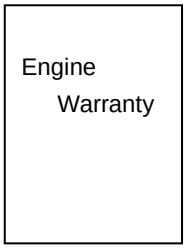

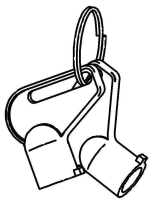

Starter Key (2 pieces)

4-2. Operation Panel Part Names

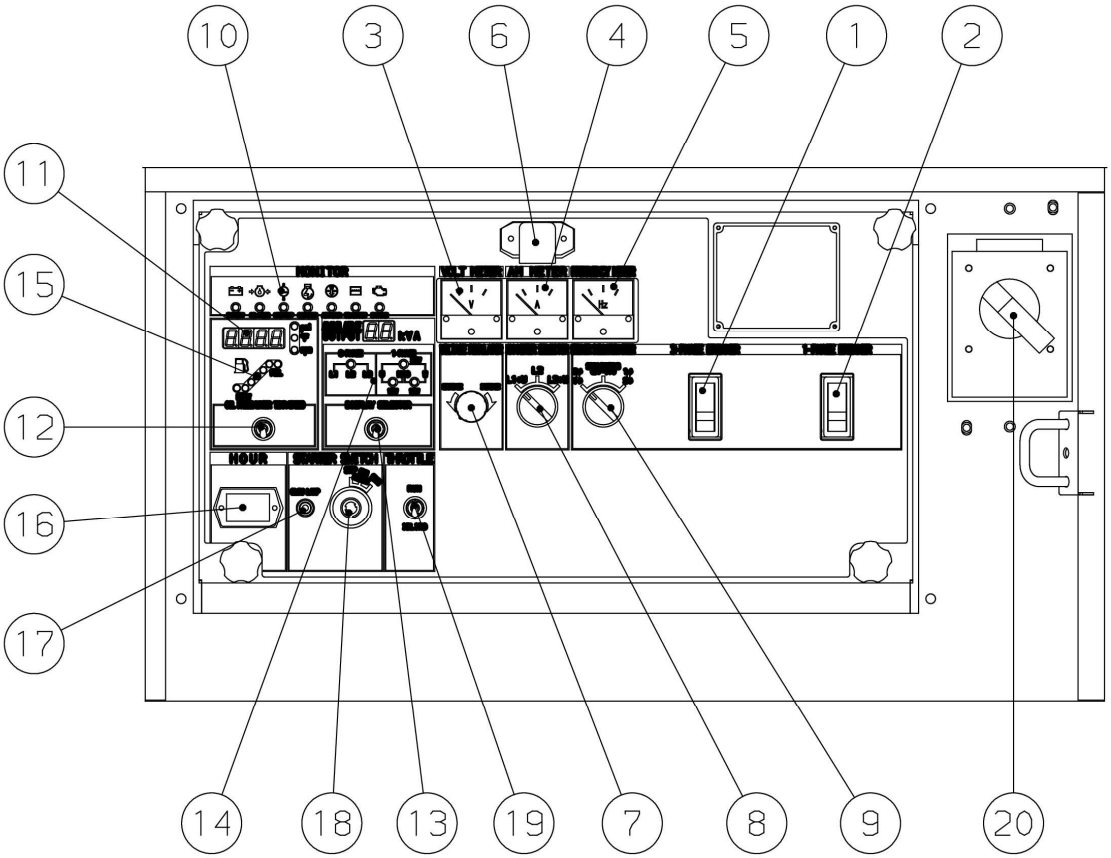

①	3-Phase Circuit Breaker	⑪	Engine Monitor
②	1-Phase Circuit Breaker	⑫	Oil pressure/Water Temperature/Speed Selector Switch
③	Voltmeter	⑬	Display Selector Switch
④	Ammeter	⑭	Available Output Monitor
⑤	Frequency Meter	⑮	Fuel Meter
⑥	Pilot Lamp	⑯	Hour Meter
⑦	Voltage Regulator	⑰	Pre-Heating Indicator
⑧	Ammeter Selector Switch	⑱	Starter Switch
⑨	Breaker Trip Selector Switch	⑲	Throttle Switch
⑩	Warning Indicators	⑳	Voltage Selector Switch

5. Equipment

5-1. Available Output Monitor

The available generated output for each output power source is displayed digitally. You can use the display selector switch to change the display in the following order: three-phase, single-phase three-wire U-W output, and single-phase three-wire U-N/G output. Three-phase output is constantly displayed when the engine is stopped.

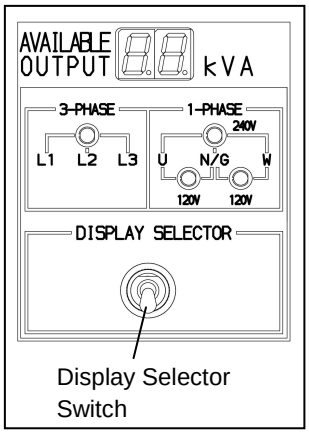

< NOTE >

- Consider the digitally displayed available output as an approximate estimate. Be especially sure to thoroughly consider the displayed value and the used load capacity when using a load such as that of a motor with a large starting capacity.
- The displayed output capacity might not be correct values if using a four-wire connection (single-phase using the N/G terminal) for a three-phase output power source. Connect to a single-phase/three-line type power source if using a single-phase power source.
- If "- -" is displayed for the available output, it means that usage has exceeded the rated capacity. Immediately stop the equipment being used and reduce the load capacity of the equipment.

5-2. Warning Indicators

WARNING : INJURY

- Do not open the check door during operation. Be careful of pinching or catching of moving parts such as the cooling fan and fan belt.
- Always be sure to stop the engine and remove the engine key when performing inspection or maintenance.

CAUTION : BURNS

- Do not touch the engine and surrounding components immediately after stopping the engine as they are still hot.

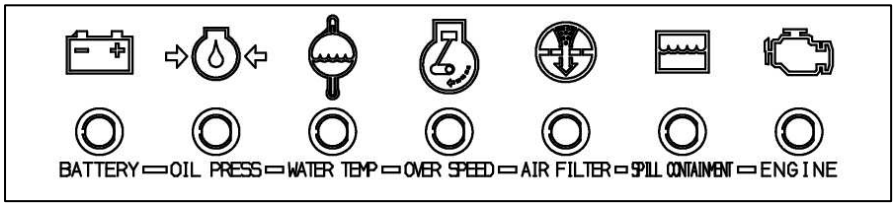

This generator is equipped with the following warning indicators: BATTERY (battery charge), OIL PRESS (engine oil pressure), WATER TEMP (coolant temperature), OVER SPEED (engine overspeed), AIR FILTER (air cleaner clogging), SPILL CONTAINMENT (spill containment amount), and ENGINE (engine malfunction). An indicator lights up if a malfunction/fault occurs during operation and the engine automatically stops depending on the fault type. Moving the starter switch from STOP to RUN causes the following indicators to light up for approximately 0.5 sec.: OIL PRESS, WATER TEMP, and ENGINE.

(1) WATER TEMP (Coolant Temperature) Warning Indicator (High Water Temp.)

CAUTION: BURNS

- Do not open the radiator cap immediately after stopping the engine. Do so will result in hot steam gushing out.
- Hot steam gushes out from the coolant sub-tank if the generator overheats. Do not touch the coolant sub-tank.

If the coolant temperature rises above 230 ℉ durin g operation, the WATER TEMP and ENGINE warning indicators light up, and the engine automatically stops. If this occurs, hot steam will gush out of the coolant sub-tank. Check the coolant sub-tank coolant level after the generator cools and add coolant to the coolant sub-tank if it is insufficient. (Refer to section "**8-2. Checking Coolant**".) If the coolant is at the specified amount, it is probable that the fan belt is loose or there is a coolant leak. Wait for the engine to cool and inspect for these problems.

< NOTE >

- The coolant temperature cannot be detected if the coolant level is excessively low. Always be sure to check the coolant level in the radiator coolant sub-tank before starting work.

(2) OIL PRESS (engine oil pressure) Warning Indicator (Low Oil Press.)

CAUTION: BURNS

- Always be sure to stop the engine and allow the engine to cool when performing inspection or maintenance of engine oil. Opening the oil gauge or oil filler cap during operation will result in hot oil gushing out.

If the engine oil pressure drops below 7 psi (0.49 x 100 kPa) during operation, the OIL PRESS and ENGINE warning indicators light up, and the engine automatically stops. If this occurs, check the engine oil level and add engine oil until it reaches the maximum level.

< NOTE >

- This oil pressure warning indicator cannot detect oil deterioration. Change the engine oil periodically. (Refer to section "**8-1. Checking Engine Oil**".)

(3) OVER SPEED (Engine Overspeed) Warning Indicator

This generator is equipped with a function such that the engine is automatically stopped if an engine fault occurs causing the engine speed to increase excessively. If the engine speed rises above 2070 rpm during operation, the OVER SPEED and ENGINE warning indicators light up, and the engine automatically stops. If this occurs, it is probable that some malfunction has occurred in the engine. Contact the authorized distributor where the generator was purchased.

(4) BATTERY (Battery Charge) Warning Indicator (Low Battery Voltage)

The BATTERY warning indicator lights up when charging is not possible during operation. If charging is not possible and the battery voltage drops below 8 V, the ENGINE warning indicator also lights up and the engine automatically stops. If this occurs, contact the authorized distributor where the generator was purchased.

< NOTE >

- This battery charging warning indicator cannot detect battery deterioration or insufficient battery fluid. (Refer to section "**8-7. Checking the Battery**".)

(5) AIR FILTER (Air Cleaner Clogging) Warning Indicator

The AIR FILTER warning indicator lights up if the air cleaner element becomes clogged during operation. If it lights up, immediately stop the engine and clean or replace the air cleaner element.
(Refer to section "**10. Inspection/Maintenance (3) Air Filter Element Cleaning/ Replacement**".)

(6) SPILL CONTAINMENT (Spill Containment Amount) Warning Indicator

The SPILL CONT warning indicator lights up if the liquid stored in the spill containment exceeds approximately 10 gal. during operation. If it lights up, immediately stop the engine and flush the liquid stored in the spill containment.
(Refer to section "**10. Inspection/Maintenance (8) Flushing Liquid in Spill Containment**".)

(7) ENGINE (Engine Malfunction) Warning Indicator

The ENGINE warning indicator lights up if the coolant temperature is high, the oil pressure is low, the engine overspeeds, the battery voltage is low or some other engine fault occurs during operation. If this occurs, a malfunction code is displayed on the engine and available output monitors, and the engine automatically stops or the engine output is reduced.
If the ENGINE warning indicator lights up, contact the authorized distributor where the generator was purchased.

5-3. Meters and Gauges

Engine Meters and Gauges

(1) Hour Meter

Displays the operating time. Use this as a rough estimate for managing the timing of periodic inspection. Be careful as the hour meter operates when the starter switch is at RUN regardless of whether the engine is running.

(2) Engine Monitor

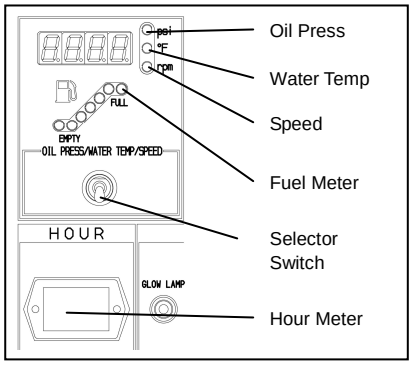

Displays the engine speed, water temperature and oil pressure. Switching the selector switch changes the display in the following order: Speed → Water temp → Oil press. Engine speed is first displayed when the engine is started.

① Speed
Displays the engine speed. 1800 rpm is displayed when at 60 Hz.

② Water Temp
Displays the temperature of the engine coolant. Normal temperature displayed during operation should generally between 158 and 203 ℉ depending on use conditions.

< NOTE >

- If the coolant temperature rises above 212 ℉, imm ediately stop all equipment using the generator, and idle the engine while cooling it to lower the coolant temperature.

③ Oil Press
Displays the pressure of the engine lubrication system. Normal pressure displayed during operation should generally between 35 and 57 psi depending on use conditions. However, the pressure will rise above this range immediately after starting a cold engine. Idle the engine until it reaches the normal pressure.

(3) Fuel Meter

Displays the amount of fuel in the internal fuel tank. When the tank is full, all lamps are lit up and FULL is displayed. The amount of lamps lit up decreases as the amount of fuel decreases as it approaches EMPTY. Add fuel immediately when only one lamp is displayed. The fuel meter on the control panel will only display the fuel level for the internal fuel tank.

Generator Meters and Gauges

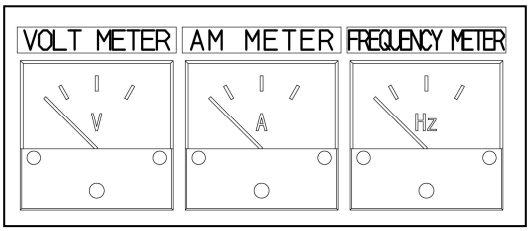

(1) Voltmeter

The voltmeter displays the three-phase output voltage (voltage between L1-L3). Check that 240 V is displayed during operation. Output voltage for single-phase three-wire (voltage between U-W) is the same voltage as the three-phase output voltage (voltage between L1-L3). Accordingly, use the voltage meter displayed value as a reference.

* Check that 480 V is displayed during operation if using at the three-phase 480-V setting. The voltage of single-phase three-wire output of “U-W Voltage” is a value that is one half of the displayed voltage meter value.

(2) Ammeter

Displays the output current (phase current) of the generator. Turn the ammeter selector switch to “L1+U” to display the output current of the three-phase L1 phase and single-phase U phase. Turn the switch to “L3+W” to display the output current of the three-phase L3 phase and single-phase W phase. “L2” displays the output current of three-phase output terminal L2.

< NOTE >

- If measuring the output current for a single-phase three-wire type, turn the ammeter selector switch to “L1+U” or “L3+W”. The voltage cannot be accurately measured if set to “L2”.

(3) Frequency Meter

Displays the frequency of the power source. Check that 60 Hz is displayed during operation.

Indicators

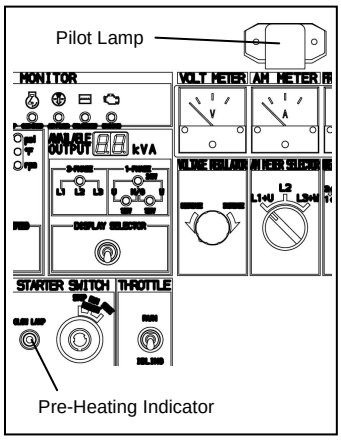

(1) Pre-heating Indicator

The pre-heating indicator lights up when the starter switch is at PREHEAT. The pre-heating indicator turns off when pre-heating is completed to indicate that it is possible to start the generator.

< NOTE >

- Pre-heating time depends on the coolant temperature, and should be completed in approximately 0.5 to 15 sec.

(2) Pilot Lamp

This lights up when the engine is operating to indicate that power is being generated.

Switches

(1) Starter Switch

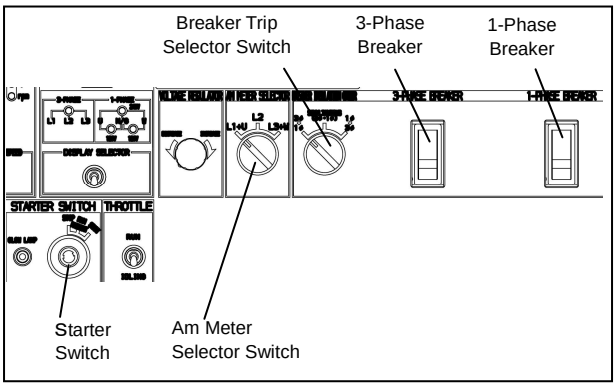

① STOP
The engine is stopped and all power is cut off when in this position. The key can be inserted and removed when in this position.

② RUN/PREHEAT
Position for operating the generator. It is also the position for air heater preheating in order to increase startability in cold condition.

< NOTE >

- Do not leave the generator in this position with the engine stopped.
  Doing so will cause the battery to drain.

③ START
Position where the engine is started. If you remove your hand from the key, the switch automatically returns to RUN.

(2) Breakers

These switches are for transmitting electrical power to the load side. Turn to ON to output voltage to the output terminals. Transmission of electricity to the load side is cut off when there is a short circuit or overload on the load side.

< NOTE >

- Do not operate these breakers to operate or stop a load.

(3) Breaker Trip Selector Switch

This switch is for selecting the tripping order of the three-phase and single-phase breaker when there is a short circuit or overload on the load side. If the three-phase or single-phase breaker is selected for precedence in tripping, the selected breaker will trip first when the total generator output exceeds the rated capacity.
After that, the other breaker will also trip if the generator output exceeds the rated capacity again.

- Switch Selection
  - ○ “$3\phi \Rightarrow 1\phi$”: The three-phase breaker trips first followed by the single-phase breaker.
  - ○ “Simultaneous (3ϕ ・ 1ϕ)”: The three-phase and single-phase breakers trip simultaneously.
  - ○ “$1\phi \Rightarrow 3\phi$”: The single-phase breaker trips first followed by the three-phase breaker.

(4) Ammeter Selector Switch

This switch is for selecting the output current indicated by the ammeter. Change the switch to display the following output terminal current on the ammeter.

- Switch Selection
  - ○ “L1+U”: Three-phase L1 phase + Single-phase three-wire U phase (total)
  - ○ “L2”: Three-phase L2 phase
  - ○ “L3+W”: Three-phase L3 phase + Single-phase three-wire (total)

< NOTE >

- If measuring the output current for a single-phase three-wire type, turn the ammeter selector switch to “L1+U” or “L3+W”. The voltage cannot be accurately measured if set to “L2”.

Voltage Regulator/Engine Speed Switch

(1) Voltage Regulator

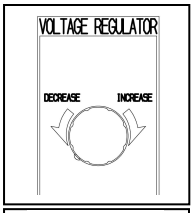

This dial is for regulating voltage output by the generator. Turn the dial clockwise to increase the voltage and counterclockwise to decrease it.

(2) Engine Speed Switch

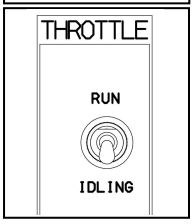

- Throttle Switch
  This switch is for changing the engine speed. Set to IDLING when starting, warming up and cooling down the engine, and set to RUN during rated operation.

5-4. Spill Containment

The bed of this generator is equipped with a spill containment (structure for preventing leakage of liquids) so that any spilled liquid will not leak to outside of the generator when oil or fuel is spilled or leaks. Before starting operation, check if there is accumulated liquid in the spill containment. Flush out any liquid that has accumulated. Refer to section “**8-5. Checking the Spill Containment” for inspection procedures. Refer to section** “**10. Inspection/Maintenance (8) Flushing Liquid in Spill Containment**” for flushing procedures. The generator is equipped with the following in order to prevent liquid from spilling in case you forget to flush the liquid: The operation panel is equipped with an indicator that lights up when its sensor is triggered when the spill containment capacity accumulated enough liquid to reach the 1/4 full (approx. 10 gal.) level.

< NOTE >

- Water can also accumulate in the spill containment due to rain entering into the generator. Accordingly, you should periodically flush liquid accumulated within the generator. However, you should flush water according to the frequency/amount of rainfall.
- The types of liquids that can accumulate in the spill containment include oil, fuel, coolant and battery fluid such that it is not possible to distinguish between rainwater and other liquids. Dispose of flushed liquids according to the applicable laws and regulations.

5-5. Fuel Piping Switch (3Way Fuel Valve)

CAUTION:

- Always make sure that the engine is stopped when working on piping.
- Always be sure to wipe up any spilled fuel.
- After working on the piping, check that there is no fuel leakage.

Change the three-way fuel valve to switch to supply fuel from the external tank. In that case, the internal fuel tank is not used.

(1) If using the internal fuel tank:
The three-way fuel valve is turned to the “A” side when the generator is shipped from the factory.

< NOTE >

- When disconnecting piping from the external tank, turn the lever to the “A” side, and attach the included connecting hose to the external tank fuel inlet/return.

(2) If using an external fuel tank:

Pass the fuel hose from the external tank through the external fuel ports and connect to the external tank fuel inlet/return of the 3way fuel valve. Change the lever of the 3way fuel valve to the “B” side to supply fuel from the external tank.

Refer to “**9-6. Connecting an External Fuel Tank**” for corresponding procedures.

< NOTE >

- Protect the piping connecting the external fuel tank and this generator with corrugate tubing or similar in order to prevent interference between the generator internal parts and the external fuel ports.

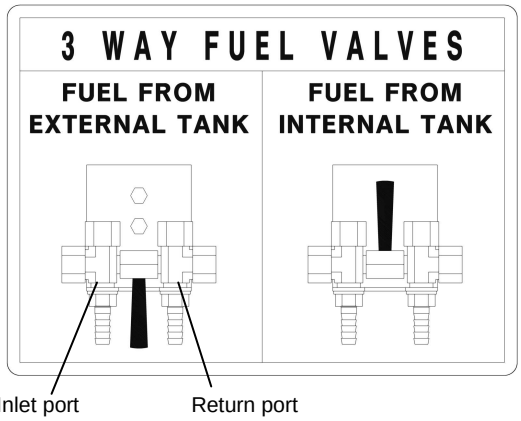

Position B **Position A**

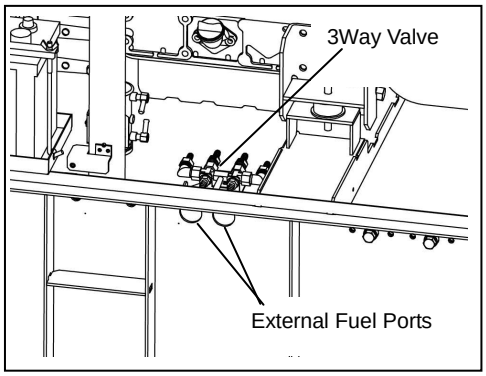

6. Transporting/Installing

6-1. Transport Procedures

WARNING : INJURY

- Do not suspend using tie downs. Use of such could result in the generator falling.
- No persons should be under a suspended generator.

CAUTION : INJURY

- Always be sure to use lifting hooks when suspending the generator, and raise it slowly at a completely vertical angle.
- Personnel performing suspension work must wear protective gear such as helmets, safety shoes and gloves.
- Do not move the generator during operation.

(1) Lifting Procedures

Always be sure to always use lifting hooks when suspending the generator, and raise it slowly at a completely vertical angle.

(2) Transport

When transporting this generator, tie rope to the left and right tie downs, and securely fix the generator.

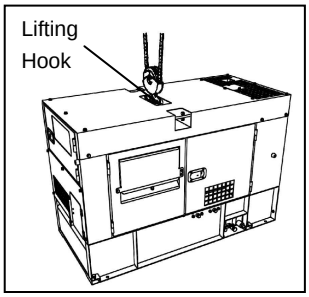

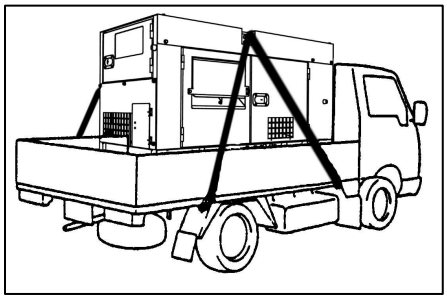
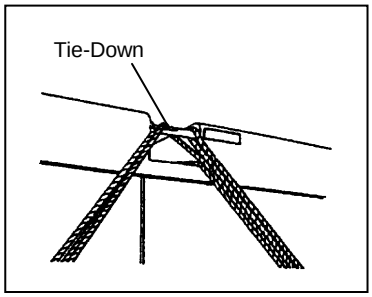

< NOTE >

- Handle this generator with great care when raising, lowering and transporting. Roughly handling this generator can result in damage or malfunction.

6-2. Installation Procedures

WARNING : EXHAUST GAS POISONING

- Do not operate the generator in poorly ventilated areas such as indoors or tunnels, as the exhaust gas of the engine contains substances that are harmful to human health.
- Do not direct exhaust fumes at bystanders or buildings.

CAUTION : FIRE

- Do not bring flammable items (such as fuel, gas and paint) or items that are highly combustible near the generator as the muffler, exhaust gas and other parts become extremely hot.
- Operate this generator 3 ft. (1 m) or more from walls or other hindrances, and on a level surface.
- Remove the wood ties if using anchors to secure the generator
- Do not connect the generator output to indoor wiring.

■ If installing this generator, set up barriers or fencing completely around the boundary line of the construction area and take measures to prevent persons not involved in the construction from entering the area.

■ Position this generator on a hard, flat and level surface that serves as the foundation.

■ Position this generator 3 ft. (1 m) or more from walls or other hindrances so that the operation panel door and left/right check doors are accessible for internal inspection/maintenance.

< NOTE >

- This generator is manufactured presupposing that it will be installed on a flat, hard and level surface that serves as the foundation. Accordingly, care must be taken as using under any other installation conditions can result in a fault or malfunction.
- Do not place any objects where they will interfere with the radiator or muffler exhaust ports. Objects interfering with these ports will result in reduced engine output, overheating, and electrical component fault/malfunction.
- Operating the equipment in dusty or excessively salty location can result in a clogged radiator or overheating resulting in malfunction/fault or reduced insulation of electrical components. Be sure to thoroughly inspect and perform maintenance if using in such locations.

7. Load Connections

7-1. Load Cable Selection

CAUTION : PROPERTY DAMAGE

- Cable burnout can occur due to generated heat if the load current exceeds the allowable current of the cable.
- The voltage drop between cables is large if the cable is excessively long or thin, resulting in decreased input voltage to equipment using the generator, thereby causing decreased performance, faulty operation and malfunction.

Select cable for use that has sufficient thickness and an allowable current possible for use, giving consideration to the distance from the generator to the equipment using the generator.

< NOTE >

- Select cable with a thickness that ensures that the voltage drop across the cable will be within 5% of the rated voltage.

■ Load Cable Selection Tables

(Ex.) If used voltage is 240 V and voltage drops by 12 V.

Three-phase: Cabtyre cables

(Unit: AWG)

Length / Current	100 ft (30 m) or less	200 ft (61 m)	300 ft (91 m)	400 ft (122 m)	500 ft (152 m)	600 ft (183 m)
50 A	10	8	6	4	4	2
100 A	8	4	2	1	1	1/0
150 A	6	2	1	1/0	2/0	3/0
200 A	4	1	1/0	2/0	3/0	4/0

(Ex.) If used voltage is 120 V and voltage drops by 6 V.

Single-phase Cabtyre cables

(Unit: AWG)

Length / Current	200 ft (61 m) or less	300 ft (91 m)	400 ft (122 m)
10 A	10	8	8
20 A	8	6	4
30 A	6	4	2
50 A	4	2	1/0
100 A	1	2/0	3/0
130 A	1/0	3/0	4/0
170 A	2/0	4/0	-

7-2. Connecting Load Cables

WARNING : ELECTRIC SHOCK

- Before connecting or disconnecting the load cables to/from the output terminal, always turn the output circuit breakers to the OFF position, stop the engine, and remove the ignition key.
- Close the output terminal cover before operating.
- Do not insert a pin, needle or other metal object into the electrical outlet.
- Do not touch the generator if the generator or casing becomes wet during operation.

CAUTION : FIRE

- Do not connect the generator output to indoor wiring.

< NOTE >

- When connecting a load, check that the generator output setting, output terminal connection position, and load power source are all matching.
- If using the N/G terminal, be careful that the currents of each phase are uniform.
- If using three-phase output simultaneously with a single-phase three-wire type output, use in a range where the total current does not exceed the rated current.
- If using three-phase output simultaneously with a single-phase three-wire type output, be careful as it is possible for the outputs to mutually affect each other.
- Use proper tools when connecting a load to sufficiently tighten the connection. Failure to sufficiently tightened will result in cable burnout.
- Terminal cover must remain closed during operation or breaker will trip.

(1) Three-Phase Output Terminal

■ For three-phase load:

- Terminal voltage is 240/480 V.

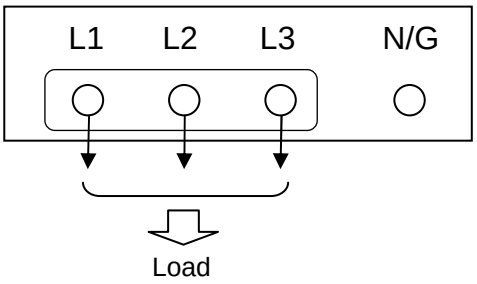

■ For single-phase load:

- Terminal voltage is 139/277 V.

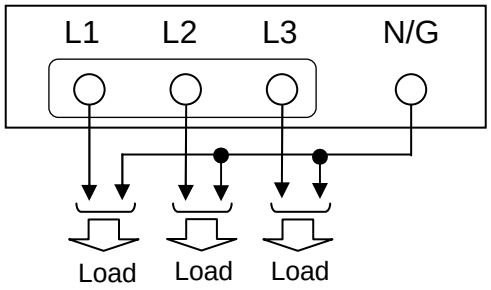

■ For single-phase load:
- Terminal voltage is 240/480 V.

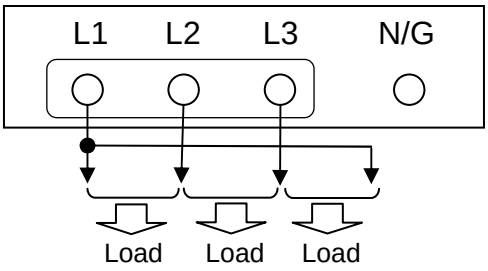

(2) Single-Phase Three-Wire Output Terminal and Receptacle

■ For single-phase three-wire type load:
- U-W terminal voltage is 240 V.
- U-N/G terminal voltage is 120 V.
- W-N/G terminal voltage is 120 V.

■ For single-phase 240 V load:

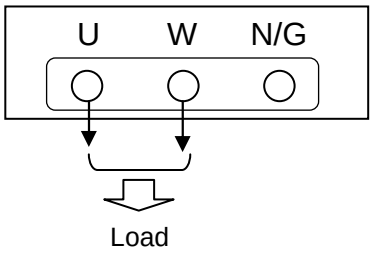

■ For single-phase 120 V load:

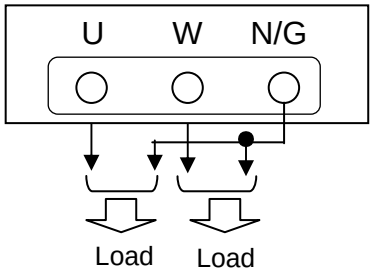

■ Single-phase 120-V receptacle, single-phase 240/120-V receptacle

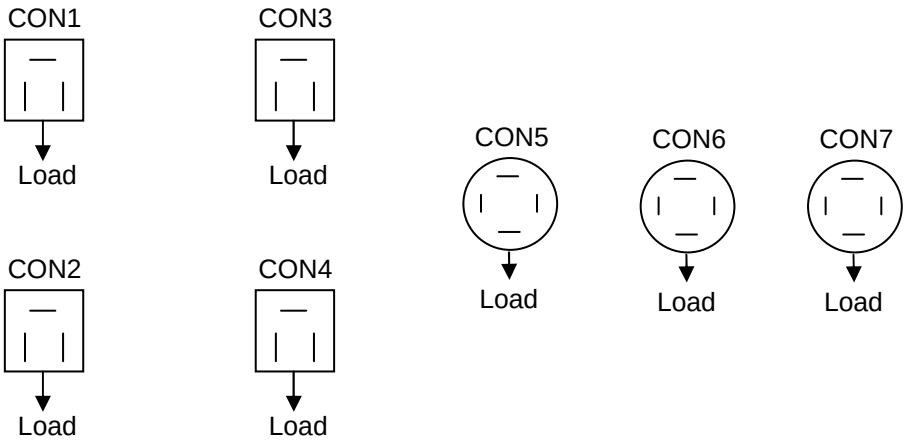

■ Power available for use by each output terminal and receptacle are as show below.

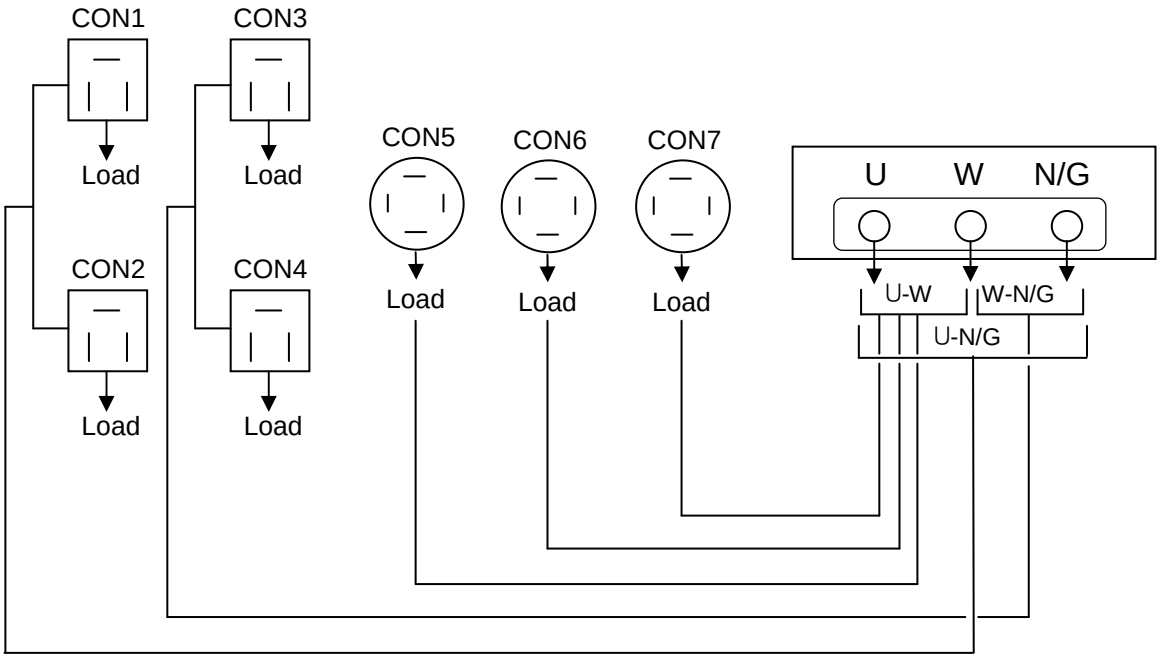

Use is possible up to the kVA as shown below.

1-phase, 3-wire output terminal		1-phase 120-V receptacle				1-phase 240/120-V receptacle			Total
		CON1	CON2	CON3	CON4	CON5	CON6	CON7	
U-W	36/ [18]	2.4	2.4	2.4	2.4	7.2	7.2	7.2	36/ [18]
U-N/G	18/ [9]								36/ [18]
W-N/G	18/ [9]								36/ [18]

* Figures in brackets are used when set to 480 V.

< NOTE >

- If using a single-phase 120 V (between output terminals U-N/G and W-N/G), connect an equivalent load between U-N/G and W-N/G.
- If using a single-phase three-wire output terminal simultaneously with a receptacle output, make sure that currents passing through each phase is less than the rated current of this generator.
- If using at the three-phase 480-V setting, the output voltage of the single-phase three-wire type is single-phase 240/120 V, which is the same as the three-phase 240-V setting. Accordingly, care must be taken to not draw an excessive load as the available power is only one half.

8. Pre-Operation Inspection

WARNING : INJURY

- Always be sure to stop the engine and remove the engine key when performing inspection or maintenance.
- Do not open the check door during operation. Be careful of pinching or catching of moving parts such as the cooling fan and fan belt.

CAUTION : BURNS

- Do not touch the engine and surrounding components immediately after stopping the engine as they are still hot.

CAUTION : FIRE

- Always be sure to wipe up any spilled fuel or oil.

8-1. Checking Engine Oil

To check the engine oil, keep the equipment level, remove the oil level indicator and wipe the end of it so that no oil remains, and then re-insert the dipstick fully. Prior to starting the engine, make sure to fill the engine oil through the oil filler so that it reaches the MAX line.

< NOTE >

- Wait approximately five minutes or more after stopping the engine or adding oil before checking the oil level again.
- An accurate oil level reading cannot be obtained if the generator is not level.
- Do not overfill with oil. Doing so will damage the engine.

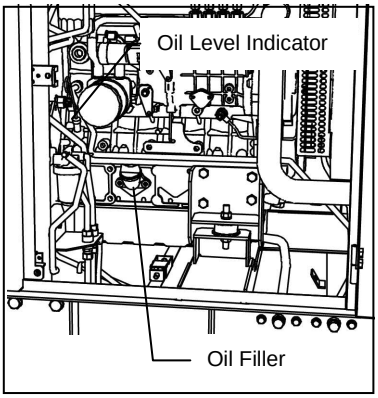

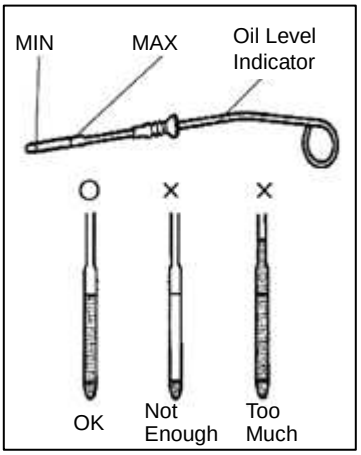

(1) Types of Engine Oil

Use only API service-type CF class or better.

(2) Engine Oil Viscosity

Use a diesel engine oil with an appropriate viscosity corresponding to the ambient temperature (refer to the table).

○ Relation of Viscosity/Temperature

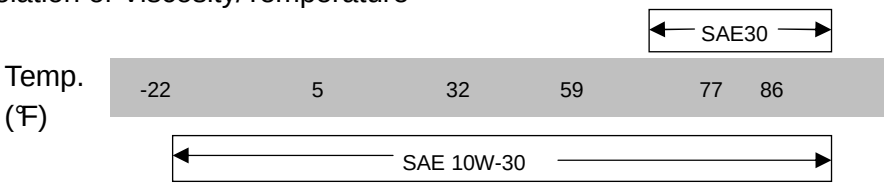

(3) Engine Oil Replacement Amount

Total Lubrication Oil Amount
3.5 (0.1) gal

Value in parenthesis is the filter capacity.

8-2. Checking Coolant

CAUTION : BURNS

- Do not open the radiator cap immediately after stopping the engine. Do so will result in steam gushing out.
- Hot steam gushes out from the coolant sub-tank if the generator overheats. Do not touch the coolant subtank.

Check that the subtank coolant level is between FULL and LOW. If the subtank coolant is lower than the LOW level, add coolant to the subtank and radiator.

(1) Filling the Sub-Tank

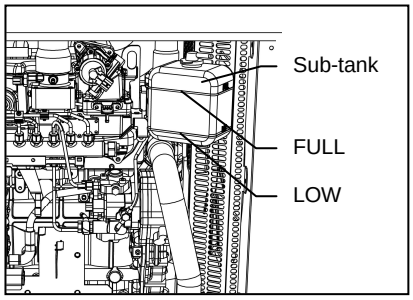

1. Remove the sub-tank cap.
2. Fill the sub-tank with coolant until it reaches the FULL line.
3. Re-attach the cap.

(2) Filling the Radiator

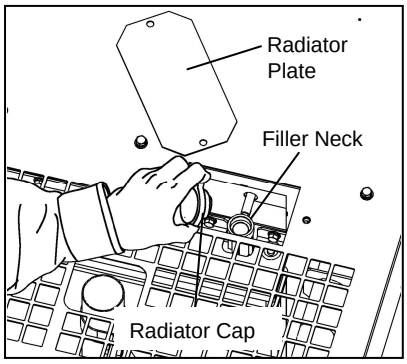

1. Remove the radiator plate.
2. Remove the radiator cap.
3. Fill with coolant through the filler neck until the radiator is full.
4. Re-attach and tighten the radiator cap.
5. Attach the radiator plate.

< NOTE >

- Use a 50:50 mix of Long Life Coolant (LLC) for engine coolant. Use GM SPEC 6277M or equivalent.
- Always use potable water when mixing the coolant.
- Use LLC with the same mixture ratio in the coolant sub-tank.
- Do not increase the LLC mixture ratio unless necessary. Doing so could result in overheating or another fault/malfunction.
- If adding LLC, be sure to use the same brand/type that is still in the generator.
- Do not mix different brands/types. Doing so could result in a chemical reaction and the creation of toxic substances.
- Change the LLC every 1,000 hours.
- LLC is a toxic substance. Wear rubber gloves and other protective wear when handling.
- If someone mistakenly ingests LLC, induce vomiting immediately and seek medical care.
- If LLC gets on skin or clothing, wash with water immediately.
- LLC is flammable. Store in a location where flame is prohibited and it cannot be accessed by children.

- Engine coolant could leak if the radiator is not completely tightened or there is a gap in the seating face. Always be sure to securely tighten the radiator cap.
- Do not add engine coolant past the FULL level line of the coolant sub-tank.

(3) Coolant Amount

Total Coolant Amount
3.3 (0.4) gal

Value in parenthesis is the sub-tank capacity.

8-3. Checking the Fan Belt

(1) Fan Belt Tension

Press your finger against the middle of the fan belt. If the slack is 1/4 to 1/2 inch, the tension is normal.

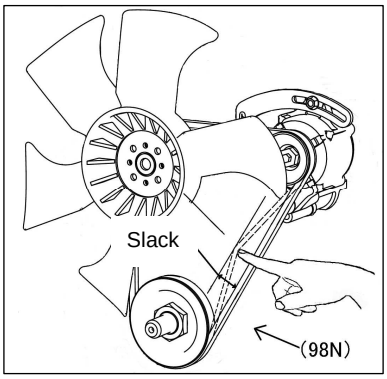

(2) Fan Belt Condition

Check the fan belt for damage and replace if any damage or other fault is found.

(3) Fan Belt Adjustment

1. Loosen the alternator installation bolts and nuts (two locations), rotate the adjustment bolt and adjust the fan belt tension.
2. Securely tighten the alternator installation bolts and nuts (two locations).
3. Check that the fan belt tension is correct.

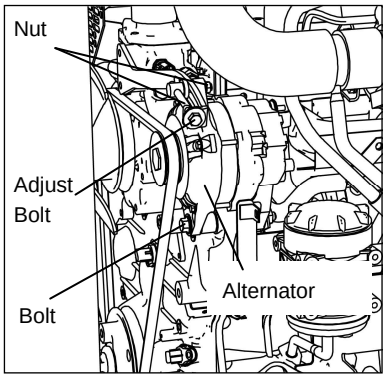

(4) Replacing the Fan Belt

Request the authorized distributor where the generator was purchased to replace the fan belt.

< NOTE >

- Use of a loose or damaged fan belt could result in overheating or insufficient charging.

8-4. Checking the Fuel

CAUTION : FIRE

- This generator uses diesel fuel. Always be sure to stop the engine and not bring flames close when inspecting fuel or refueling. Wait until the engine has cooled before performing such procedures.
- If fuel spills, always be sure to open the spill containment drain valve and drain off the spilled fuel.
  (Refer to section "**10. Inspection/Maintenance (8) Flushing Liquid in Spill Containment**".)

Check if there is a sufficient amount of fuel and add fuel if insufficient.

The fuel meter on the control panel will only display the fuel level for the internal fuel tank.

< NOTE >

- The fuel injector pump, injectors and other parts of the fuel system and engine can be damaged if any fuel or fuel additives are used other than those specifically recommended by the engine manufacturer.
- Refer to the Engine Instruction Manual for the recommended fuels.
- Always be sure to use the fuel strainer attached to the fuel inlet.
- Carefully add fuel until the tank is full.

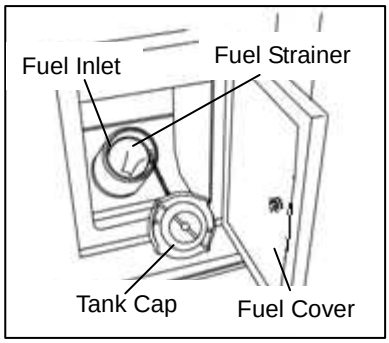

8-5. Checking the Spill Containment

CAUTION : FIRE

- If fuel or oil is leaking, repair the leaking location before operating.

Open the check door and check the inside of the spill containment. Flush out any accumulated liquid. Refer to section "**10. Inspection/Maintenance (8) Flushing Liquid in Spill Containment**" for flushing procedures.

< NOTE >

- The types of liquids that can accumulate in the spill containment include oil, fuel, coolant and battery fluid such that it is not possible to distinguish between rain water and other liquids. Dispose of flushed liquids according to the related laws and regulations.

8-6. Checking for Fuel, Oil and Coolant Leaks

CAUTION : FIRE

- If fuel or oil is leaking, repair the leaking location before operating.

Open the check door and check for fuel, oil and coolant leakage from fuel piping connections and similar locations.

8-7. Checking the Battery

CAUTION : EYE/SKIN INJURY

- Wear rubber gloves and other protective wear to protect eyes, skin and clothing from the battery fluid which contains diluted sulfuric acid. If the battery fluid contacts eyes or skin, wash out immediately with a large amount of water. Be sure to receive medical treatment, especially if the fluid contacts the eyes.

CAUTION : EXPLOSION

- Never use or recharge the battery if the fluid level is below the minimum level.
- Do not create sparks or bring flame near the battery as it generates flammable gas.

1. Check the fluid level, and add distilled water when it is near the lower level until it reaches the upper level.
2. Check the terminals for looseness and tighten if loose.

< NOTE >

- It is necessary to recharge the battery when the specific gravity of the battery fluid is 1.23 or less. Request the authorized distributor where the generator was purchased to recharge the battery.

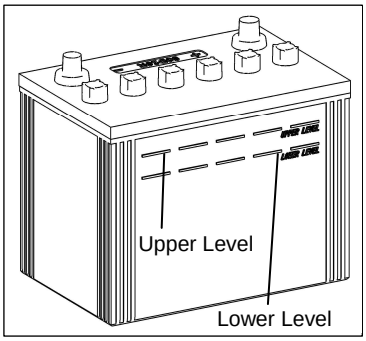

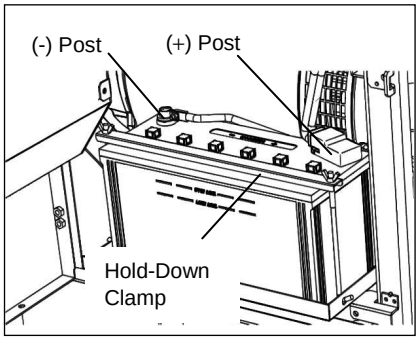

■ Replacing the Battery

1. Remove the battery negative (-) cable. (Always be sure to remove the negative (-) side first.)
2. Remove battery hold-down clamp.
3. Remove the battery positive (+) cable.
4. Remove the battery.

* Install the battery by performing the above procedures in the reverse order. (First connect the positive (+) cable of the replaced battery.)

9. Operating Procedures

9-1. Initial Startup/Pre-Check

WARNING : EXHAUST GAS POISONING

- Do not operate the generator in poorly ventilated areas such as an indoors or tunnels, as the exhaust gas of the engine contains substances that are harmful to human health.
- Do not direct exhaust fumes at bystanders or buildings.

WARNING : INJURY

- Always be sure to check that the breakers on load side and switches for any equipment using the generator are at OFF before turning the breaker to ON. Also be sure to advise personnel on the load side that power will be turned on before operating the breaker.
- Close all doors and lock them during operation.

CAUTION : FIRE

- Do not bring flammable items (such as fuel, gas and paint) or items that are highly combustible near the generator as the muffler, exhaust gas and other parts become extremely hot.
- Position this generator 3 ft. (1 m) or more from walls or other hindrances, and on a level surface.

CAUTION : NJURY

- Do not operate the generator if it has been modified or any parts have been removed.
- Position the generator on a level stable surface so that it cannot slide or move in any manner.
- Before starting operation, always be sure to turn off all switches of equipment being used and all breakers to OFF.

1. Turn the three-phase and single-phase breakers on the operation panel to OFF.
2. Turn the Throttle switch to IDLING.
3. Turn the Starter switch to PREHEAT.
4. When the pre-heating indicator changes from lit up to off, immediately change the switch to START and start the engine.

< NOTE >

- Pre-heating time depends on the coolant temperature, and completes in approximately 0.5 to 15 sec.
- Do not continuously operate the starter motor for 10 sec. or more.
- If repeating starter switch operation, wait 30 sec. or more between operating.
- Be aware that smoke might be generated when the engine is started.

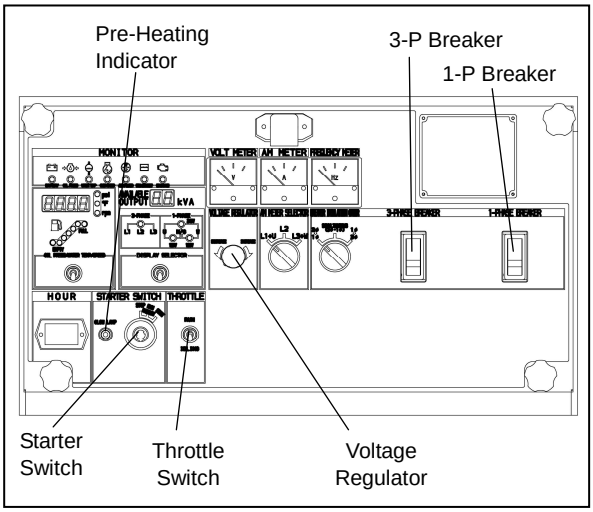

5 After starting the engine, remove your hand from the starter switch.
6 The engine idles for approximately five minutes.
7 Turn the Throttle switch to RUN.
8 Adjust the voltage regulator dial to the specified voltage.
9 Turn the breakers to ON to start power transmission.

9-2. 240/480-V Switching Function

WARNING : ELECTRIC SHOCK

- If performing any electric voltage switching, turn all breakers to OFF and stop operation.
- Lock the generator using a padlock so that no one except for designated operators can operate switches.

CAUTION : PROPERTY DAMAGE

- Check that the voltages of the generator output setting, output terminal connection and load power source are consistent.

1 Turn the three-phase and single-phase breakers on the operation panel to OFF and stop operation.
2 Turn the lever of the voltage selector switch to the desired output setting.
3 Three-phase 240/480-V power is output to the three-phase output terminal. Refer to section "**7-2. Connecting Load Cables**".
4 Start the engine and turn the three-phase breaker to ON to transmit power to the three-phase output terminal.

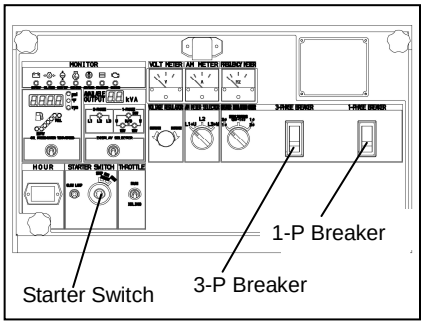

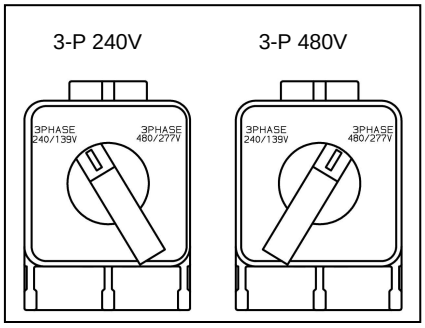

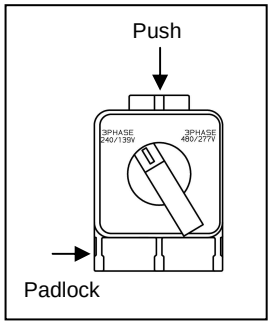

< NOTE >

- If using at the three-phase 480-V setting, the output voltage of the single-phase three-wire type is single-phase 240/120 V, which is the same as the three-phase 240-V setting. Accordingly, care must be taken to not draw an excessive load as the available power is only one half.

9-3. Procedures during Operation

(1) Checks after Startup

- Make sure that all meters and indicators are in normal status. (Refer to section "**5. Equipment**".)
- Check that there is no abnormal vibration or noise.
- Check that the exhaust gas color is normal. When operation is normal, the exhaust gas should be colorless or slightly bluish.

< NOTE >

- If abnormal, stop using this generator and request the authorized distributor where the generator was purchased to repair the generator.

(2) Adjustment during Operation

During load operation, check the voltmeter and finely adjust the voltage using the voltage regulator dial.

■ Bleeding air from the fuel system when the engine stops due to running out of fuel
This generator is equipped with an automatic air bleeding mechanism. Perform the following procedures when the engine stops due to running out of fuel to easily bleed the air from the system.

1. Add fuel to the generator.
2. Turn the starter switch to RUN. Air bleeding is completed in approximately 30 sec.

< NOTE >

- Turn the throttle switch to IDLING, start the engine and check that the air is completely bled from the system. If air bleeding is not complete, engine rotation will not be stable. In that case, repeat the air bleeding operation.

9-4. Stopping Operation

CAUTION : BURNS

- Do not touch the engine and surrounding components immediately after stopping the engine as they are still hot.

1. Turn the switches and breakers on the load side to OFF.
2. Turn the three-phase and single-phase breakers on the operation panel to OFF.
3. Turn the Throttle switch to IDLING.
4. The engine cools down for approximately three minutes.
5. Turn the starter switch to STOP.

9-5. Protective Functions

WARNING : INJURY

- Do not open the check door during operation. Be careful of pinching or catching of moving parts such as the cooling fan and fan belt.
- Always be sure to stop the engine and remove the engine key when performing inspection or maintenance.

CAUTION : BURNS

- Do not touch the engine and surrounding components immediately after stopping the engine as they are still hot.
- Hot steam gushes out from the coolant subtank if the generator overheats. Do not touch the coolant subtank.

This generator is equipped with functions to automatically stop operation when there is a fault/malfunction during operation, and one to warn the operator of the fault location by use of indicator lamps. Check the fault location when the engine is automatically stopped or an indicator lamp lights up to stop the engine.

Protection Feature List

No.	Abnormality \ Action		Breaker Trip	Engine Automatic Shutdown	Warning Lamp Flash	Cause
1	Monitor Lamp	High Water Temperature	–	○	○	Activates due to high water temperature in the engine Default 230℉
2	Monitor Lamp	Low Oil Pressure	–	○	○	Activate due to low oil pressure in the engine Default 7 psi (0.49 × 100 kPa)
3	Monitor Lamp	Battery Charge Insufficient	–	○	○	Activates in battery charge Impossible
4	Monitor Lamp	Engine Overspeed	–	○	○	Engine speed is 115% or more (2070 rpm or more)
5	Monitor Lamp	Air Filter Clogging Up	–	–	○	The element is clogged making it necessary to clean or replace the element.
6	Monitor Lamp	Spill Containment Fluid Level	–	–	○	Spill containment accumulated fluid has exceeded the specified level making it necessary to flush the fluid.
7	Monitor Lamp	Engine Malfunction	–	(○)	○	Water temperature is high, oil pressure is low, battery voltage is low, engine overspeeds, or some other engine fault occurs during operation
8	Overload		○	–	–	Activates in overload

* ○ indicates the automatic activation.

9-6. Connecting with External Fuel Tank

CAUTION : FIRE

- Always make sure that the engine is stopped when working on piping.
- Always be sure to wipe up any spilled fuel.
- After working on the piping, check that there is no fuel leakage.

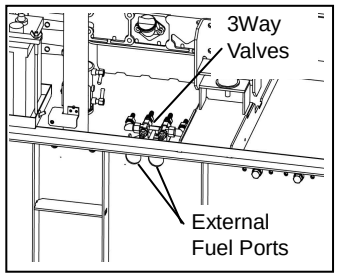

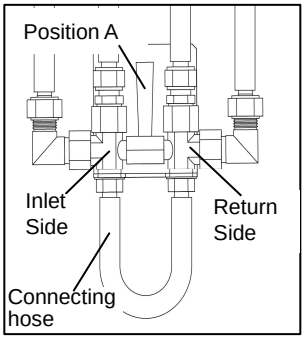

1. Turn the 3way fuel valve lever to the "A" side.
   (Position for using the internal tank.)
2. Remove the connecting hose of the 3way fuel valve.
3. Pass the hose from the external tank through the external fuel ports and connect to the external tank fuel inlet/return of the 3way fuel valve.

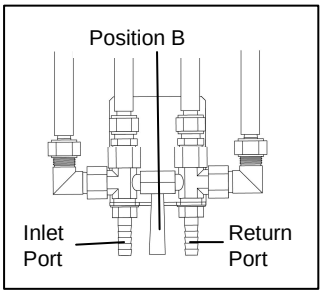

4. Turn the 3way fuel valve lever to the "B" side.
   (Position for using the external tank.)
5. Bleed air from the external tank connecting hose. Fuel can be supplied from the external tank after completing the above procedures.

< NOTE >

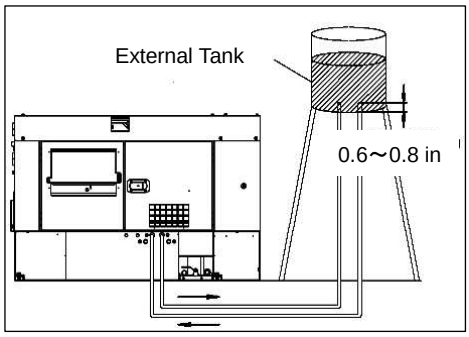

- Protect the piping connecting the external fuel tank and this generator with corrugate tubing or similar in order to prevent interference between the generator internal parts and the external fuel ports.
- If using a hose for the piping, use oil-resistant hose with an internal diameter of 0.31 to 0.35 in (8 to 9 mm).
- Set the fuel level of the external fuel tank so that it is from 0 to 10 ft. (3 m) from the underside of this generator. The fuel level of the external fuel tank being lower than this generator will result in poor engine operation or stoppage.
- Turn the 3way fuel valve lever to the "A" side in order to prevent fuel from flowing out from the external tank fuel inlet/return.
- Turn the lever completely as far as possible. If the lever is not completely pressed to either side, it might not be possible to supply fuel causing the engine to stop.
- Set the supply side so that it is 0.6 to 0.8 in. (15 to 20 mm) above the underside of the tank in order to prevent foreign material or water from being suctioned from inside the external fuel tank.
- Set the external fuel tank return side at the same height as the supply side in order to prevent poor engine operation due to air mixed in with the fuel.
- Refer to section "**9-3 Procedures during Operation**" for air bleeding.
- Some air may remain in hoses or pipes immediately after connecting the external fuel tank resulting in unstable engine speed and engine stoppage.
- Do not leave the generator unattended for unmanned operation until you have confirmed that the engine speed is stable.

10. Inspection/Maintenance

WARNING : ELECTRIC SHOCK/INJURY

- Do not touch output terminals or internal electric parts while the generator is operating.
- Do not open the check door during operation. Be careful of pinching or catching of moving parts such as the cooling fan and fan belt.
- Always be sure to stop the engine and remove the engine key when performing inspection or maintenance.
- Do not suspend using tie downs. Use of such could result in the generator falling.
- No persons should be under a suspended generator.

CAUTION : FIRE

- Always be sure to wipe up any spilled fuel or oil.

CAUTION : BURNS

- Do not touch the engine and surrounding components immediately after stopping the engine as they are still hot.
- Do not open the radiator cap immediately after stopping the engine. Do so will result in steam gushing out.
- Hot steam gushes out from the coolant subtank if the generator overheats. Do not touch the coolant subtank.

CAUTION : INJURY

- Personnel performing suspension work must wear protective gear such as helmets, safety shoes and gloves.
- Always be sure to use lifting hooks when suspending the generator, and raise it slowly at a completely vertical angle.

Perform periodic inspection and maintenance according to the following table in order to constantly maintain this generator in good working condition. Use the hour meter as a reference for the operating time.

< NOTE >

- All procedures except for pre-operation inspection should be performed by specialized technicians.
- Request the authorized distributor where the generator was purchased to perform the procedures in the table with a "●".
- Always be sure to use genuine parts or those indicated specifically for replacement parts.
- Use a container to catch fluid bled from this generator that is large enough to prevent the fluid from spilling on the ground.
  Dispose of oil, fuel, coolant (LLC), filter, battery and other hazardous materials according to laws and regulations concerning industrial waste.
  Contact the authorized distributor where the generator was purchased if you have any inquiries regarding proper disposal.
- When check doors are open during maintenance, take measures so that unrelated personnel cannot accidentally come close to the generator. Close all doors and covers if you are going to be away from this generator.

	Description	Daily	Every 100 hrs	Every 200 hrs	Every 400 hrs	Every 500 hrs	Every 800 hrs	Every 1000 hrs	Every 1500 hrs	Every 3000 hrs
Engine	Each parts (Clean/Tightening)	○								
	Engine oil (Check/Add)	○								
	Engine oil (Replace)	○ 1st time at 50 hrs		○						
	Oil filter (Replace)	○ 1st time at 50 hrs			○					
	Coolant (Check/Add)	○								
	Coolant (Replace/ Radiator Flush)							○		
	Exhaust color (Check)	○								
	Water separator (Check/Drain excess water and sediments)	○		○ (Drain)						
	Main & Pre-fuel filter (Replace)				○ (Replace)					
	Fuel tank (Drain water)			○						
	Water separator and Gauze filter (Clean)					○ (Clean)				
	Fuel tank (Clean)					●				
	Check for leaks (Fuel/Oil/Coolant)	○								
	Fuel hose (Replace)							●		
	Air cleaner element (Clean/Replace)		○ (Clean)		○ (Replace)					
	Battery fluid level (Check)	○								
	Battery gravity (Check)	○								
	Fan belt tension (Check)	○								
	Fan belt (Replace)					●				
	Radiator and fins (Clean)					●				
	Valve clearance (Check/Adjust)						●			
	Fuel injector (Check)								●	
	Supply pump (Check)									●
	Oil separator filter (Replace)							●		
Generator	Indicators, Gauges (Check)	○								
	Alarms (Check)									
	Insulation test			○						
Others	Spill containment fluid (Check/Drain)	○								
	Spill containment (Check/Clean)					●				

(1) Engine Oil Replacement

First Time	50 hours
Thereafter	Every 200 hours

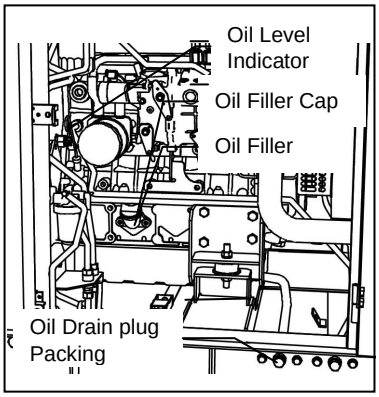

1. Remove the oil filler cap.
2. Remove the oil drain plug and drain the engine oil.
3. After the oil has been drained, reinsert the oil drain plug with new packing.
4. Add oil through the oil filler until it is at the maximum level while checking the fuel level using the oil level indicator.
5. Attach the oil filler cap.

< NOTE >

- Refer to section "**8-1. Checking Engine Oil**" for engine oil replacement amounts and types.
- Replace the packing of the oil drain plug with new packing each time the oil is replaced.
- Packing part no.: 6C090-58961 (Kubota part no.)
- After reinserting the oil drain plug and shortly after starting the engine, be sure to always check that there is no oil leakage.

(2) Replacing the Oil Filter

First Time	50 hours
Thereafter	Every 400 hours

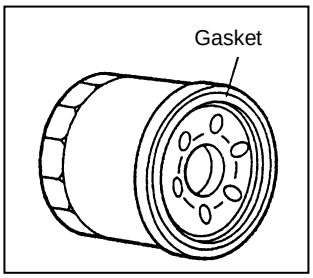

1. Drain the engine oil. (Refer to section "1. Engine Oil Replacement".)
2. Remove the oil filter using a filter wrench.
3. Spread a thin layer of oil on a new oil filter gasket.
4. Thread the oil filter by hand, and turn by hand (do not use a filter wrench) from when the gasket contacts the seal surface until it is securely tightened.
5. Add engine oil to the generator.
6. Shortly after starting the engine, always be sure to check that there is no oil leaking from the seal surface.

< NOTE >

- Request the authorized distributor where the generator was purchased to perform this procedure if you do not have a filter wrench.
- Oil filter part no.: 1C020-32434 (Kubota part no.)

(3) Air Filter Element Cleaning/Replacement

Clean	100 hours
Replace	Every 400 hours

1. Remove the air cleaner clips and cleaner cap.
2. Remove the outer element.
3. Clean or remove the outer element. Replace by performing the above procedures in reverse order.

< NOTE >

- Inner air element must not be reused even if it is cleaned.
- Replace the inner element when replacing the outer element.
- Always be sure to turn the cleaner cap in the direction indicated by the arrow.
- Replace the elements earlier if using in an excessively dusty location.
- Do not add oil as this generator uses a dry element.
- Clear foreign material by pinching the vacuator valve once a week in normal operating conditions or daily if operating in a location that is excessively dirty or dusty. Wipe away any dirt or moisture that has adhered to the parts.
- Never touch the elements for any reason except cleaning.
- Element part nos.

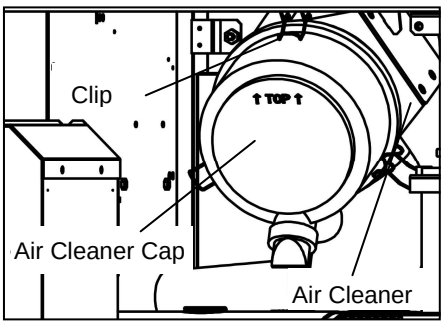

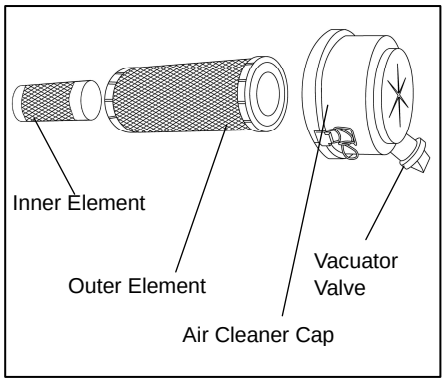

Kubota Part No.	Outer Element	59700-26112
	Inner Element	55231-26151

■ Cleaning the air filter element (outer element)

If dry dust is adhering:

Blow compressed air from inside the element.

If carbon or oil is adhering:

Replace with new parts.

(4) Draining Water from the Water Separator

Check	Daily
Clean	Every 200 hours

Drain water when the float (red) inside the cup floats to the water draining position.

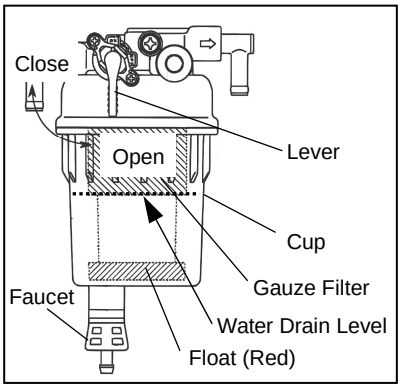

1. Close the fuel valve.
2. Loosen the lower valve.
3. After water has been drained, tighten the lower valve.
4. If foreign material is adhering to the gauze filter in the cup, remove the cup, float and gauze filter, and clean by blowing compressed air from the inside of the gauze filter.
5. Reassemble the gauze filter, cup and float to their original location.

< NOTE >

- When attaching the cup, check that there is no foreign material adhering to the O-ring.
- After attaching, open the fuel valve, and be sure to always start the engine and check that there is no fuel leakage.

(5) Fuel Filter Replacement (Main and Pre-Filters)

Replace	Every 400 hours

1. Remove the fuel filter using a filter wrench.
2. Spread a thin layer of oil on a new fuel filter gasket.
3. Thread the fuel filter by hand, and turn by hand (do not use a filter wrench) from when the gasket contacts the seal surface until it is securely tightened.
4. Shortly after starting the engine, always be sure to check that there is no fuel leaking from the seal surface.

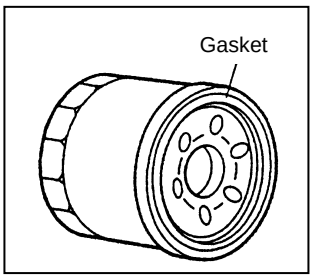

< NOTE >

- Be sure to wipe away any fuel that has spilled out of the piping when removing the filter.
- Fuel filter part nos.: Main filter 1G390-43171 (Kubota part no.)
  Pre-filter 16631-43562 (Kubota part no.)

(6) Draining Water from the Fuel Tank

Drain Water	Every 200 hours

1. Remove the fuel drain plug and packing (with rubber seal).
2. After the water has been drained, reinsert the fuel drain plug with new packing (with rubber seal).

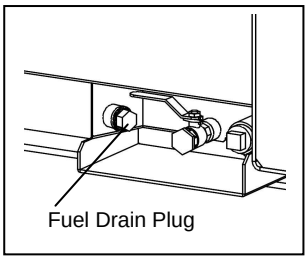

< NOTE >

- Replace the packing of the fuel drain plug with new packing each time the water is drained.
- Packing part no.: V106-000110
- After reinserting the fuel drain plug, be sure to always check that there is no fuel leakage.

(7) Coolant Replacement

Replace	Every 1000 hours

1. Remove the radiator plate.
2. Remove the radiator cap.
3. Remove the coolant drain plug and packing.
4. After the coolant has been drained, reinsert the coolant drain plug with new packing.
5. Remove the subtank and flush the coolant from the subtank.
6. Reattach the subtank to its original position and fill with coolant until it reaches the FULL level.
7. Fill the radiator with coolant until it reaches the filler neck.
8. Re-attach and tighten the radiator cap.
9. Attach the radiator plate.

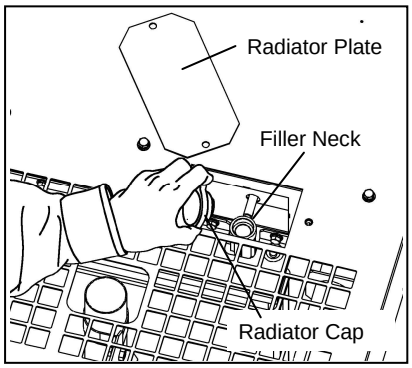

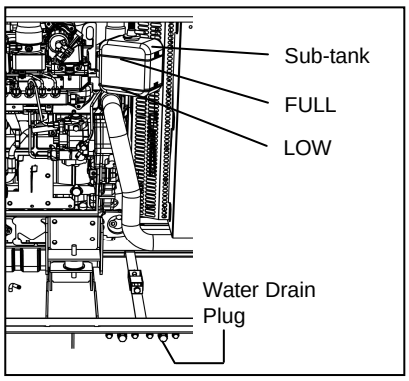

< NOTE >

- Refer to section "**8-2. Checking Coolant**" for coolant information.

- Replace the packing of the coolant drain plug with new packing each time the coolant is changed.
- Packing part no.: 6C090-58961 (Kubota part no.)
- After reinserting the coolant drain plug and shortly after starting the engine, be sure to always check that there is no coolant leakage.

(8) Flushing Liquid in Spill Containment

Check	Daily

1. Set a container to collect liquid from the flushing port of the drain valve on the front of this generator.
2. Remove the drain valve plug (R 1/2) and open the valve lever.

< NOTE >

- When removing or attaching the plug, hold the drain valve fixed using a spanner or similar tool and turn the plug.
- If oil or other liquid is mixed in with the flushed liquid, this indicates that there is an oil leak. In such case, check for the leak location.
- The types of liquids that can accumulate in the spill containment include oil, fuel, coolant water and battery fluid such that it is not possible to distinguish between rain water and other liquids. Dispose of flushed liquids according to the related laws and regulations.

3. Close the valve lever after the liquid has been flushed, and apply sealant coating to the plug or wrap it in seal tape.

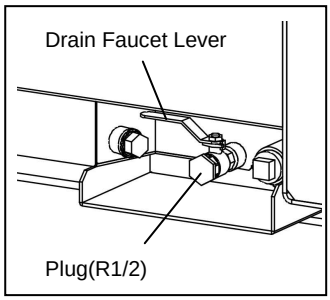

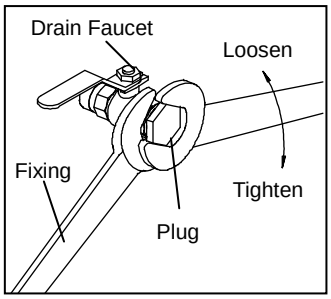

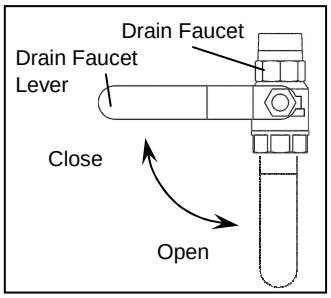

(9) Spill Containment Cleaning/Inspection

WARNING : INJURY

- Do not use the fuel tank lifting hook to suspend a gas tank that contains fuel, and do not suspend with the fuel tank and spill containment as a single unit. Doing so could result in the tank falling.

Clean	Every 500 hours

Separate the spill containment from this generator to clean and inspect the spill containment. Separate the spill containment according to the following procedures.

1. Remove the wiring connector.
2. Remove the fuel piping (supply and return sides) (union joint).
3. Remove the four spill containment fixing bolts (M16).

< NOTE >

- If removing the union joint from the connection, grasp both the screw and nut with spanners to remove them.
- Prepare a container to receive the fuel remaining in the fuel piping that will flow out of the removed fuel piping.

4. Lift the generator, separate the spill containment and set the generator on a flat surface.
5. After cleaning and inspecting the inside of the spill containment, reassemble the spill container with this generator by performing the above procedures in the reverse order.
6. Reassemble the fuel piping and wiring connector to their original positions.

< NOTE >

- After reassembling, bleed air from the fuel system.
  (Refer to section "**9-3. Procedures during Operation**".)
- After reassembling, check that there is no fuel leakage.

■ Spill Containment Cleaning/Inspection

1. Use a high-pressure cleaner or similar equipment to clean the inside of the spill containment.
2. Remove the drain plug (R1) to drain the cleaning water.
3. After cleaning, allow water to accumulate and check that the spill containment has no internal leakage.
4. Next, check that there no rust has developed inside of the spill containment. If rust has developed, remove the rust and clean again.
5. After the procedures have been completed, apply sealant coating to the plug (R1) or wrap it in seal tape.

< NOTE >

- If the fluid drained when cleaning the spill containment contains oil or grease, dispose of it according to the related laws and regulations.
- If the spill containment has a leak, contact the authorized distributor where the generator was purchased.

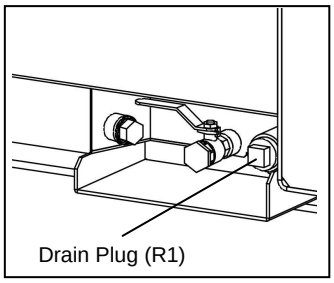

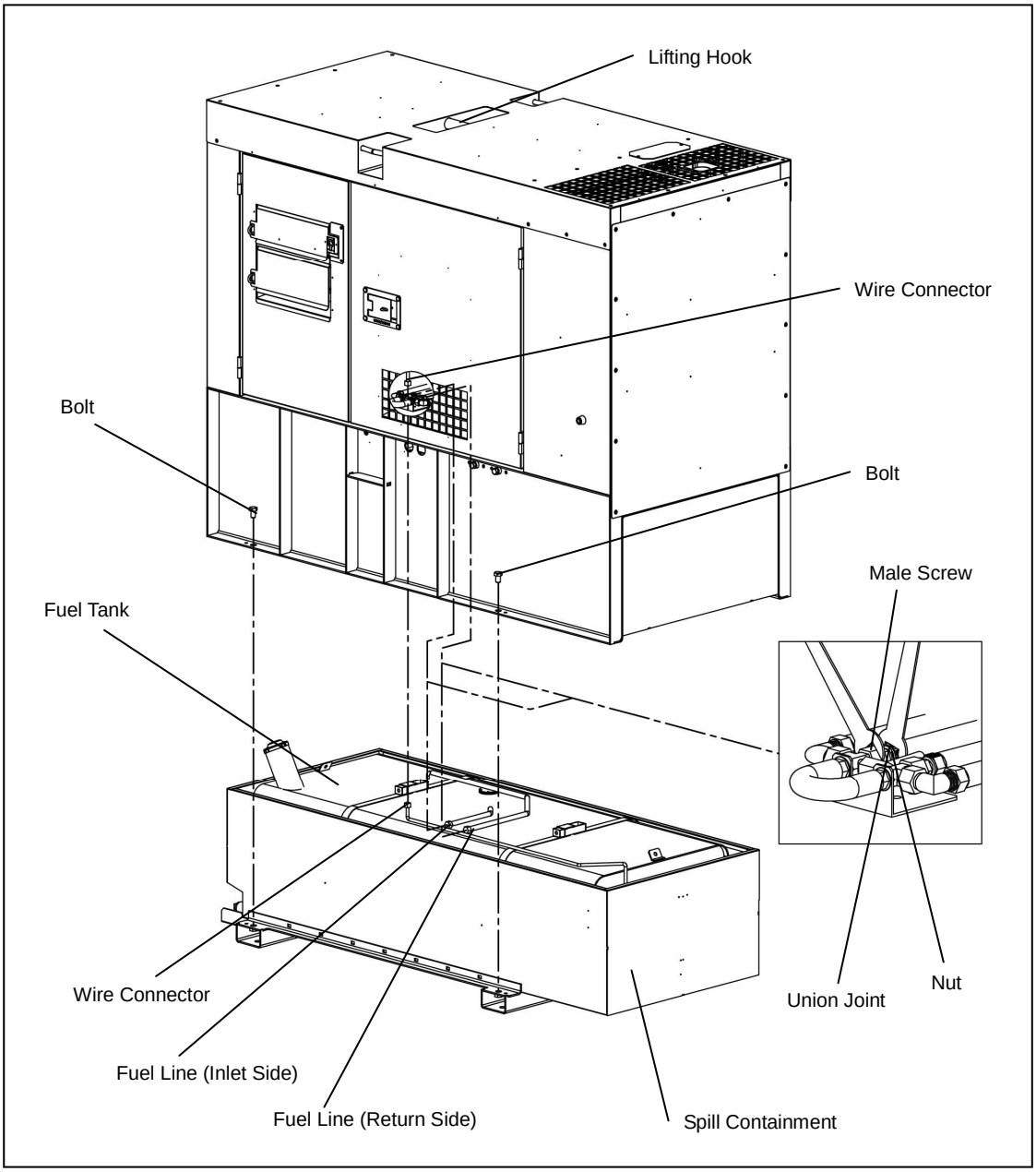
Lifting Hook
Wire Connector
Bolt
Bolt
Male Screw
Fuel Tank
Wire Connector
Union Joint
Nut
Fuel Line (Inlet Side)
Fuel Line (Return Side)
Spill Containment

(10) Oil Separator Filter Replacement

Replace	Every 1000 hours

1. Remove the cover, and remove the O-ring and oil separator filter.
2. Assemble a new O-ring to the cover and spread a thin layer of oil on the O-ring.
3. Assemble a new oil separator filter and tighten the cover by hand.

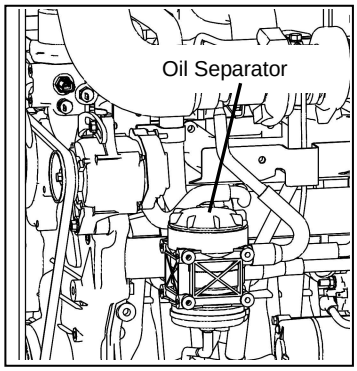

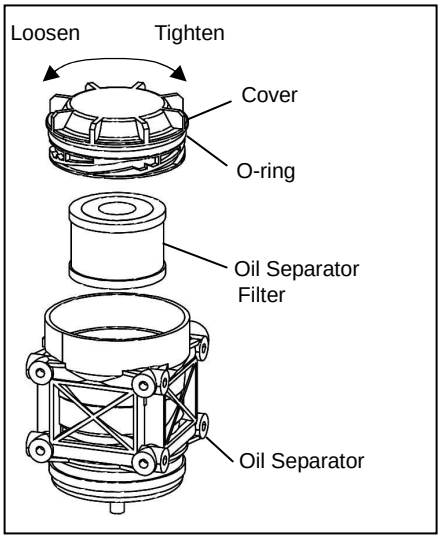

< NOTE >

- Replace with a new O-ring each time the oil separator filter is replaced.
- Oil separator filter part no. (with O-ring) 1J419-05811 (Kubota part no.)

11. Long-Term Storage

WARNING : INJURY

- Always be sure to stop the engine and remove the engine key when performing inspection or maintenance.

CAUTION : FIRE

- Always be sure to wipe up any spilled fuel or oil.
- Allow the generator to cool before covering with the protective cover.

CAUTION : BURNS

- Do not touch the engine and surrounding components immediately after stopping the engine as they are still hot.

(1) Storage Procedures

Perform the following maintenance procedures before storing this generator if it is not going to be used for two months or more.

1. Remove the battery.
   (Refer to section "**8-7. Checking the Battery Replacing the Battery**".)
2. Replace the engine oil.
   (Refer to section "**10. Inspection/Maintenance (1) Engine Oil Replacement**".)
3. Drain the fuel from the fuel tank and filter.
   (Refer to section "**10. Inspection/Maintenance (5) Fuel Filter Replacement (Main and Pre-Filters)**".)
   (Refer to section "**10. Inspection/Maintenance (6) Draining Water from the Fuel Tank**".)

4 Clean and inspect the inside of the spill containment.
(Refer to section "**10. Inspection/Maintenance (9) Spill Containment Cleaning/Inspection**".)

5 Remove the starter key and store in a secure location.

6 Clean all generator components, and store in a dry and dust-free location. Also cover when storing so that rain cannot enter through the suction or exhaust ports.

< NOTE >

- Adjust the fluid of the removed battery to the appropriate level and recharge approximately every month.

(2) Double-Stacking Procedures

WARNING : INJURY

Always be sure to observe the following items when double stacking this generator in a warehouse or similar location.

- Check that the hood of this generator is not dented, and that bolts are not loose or missing.
- Set in a location with a flat hard floor capable of withstanding the double-stacking weight.
- Always be sure to use lifting hooks when suspending this generator.
- Insert wood ties of the same size and that are wider than this generator between each generator, and set another generator on top of the ties.
- Never stack more than two levels, and do not set a generator on top that is larger in weight/size than that on the bottom.
- Do not operate the generator when it is double stacked.

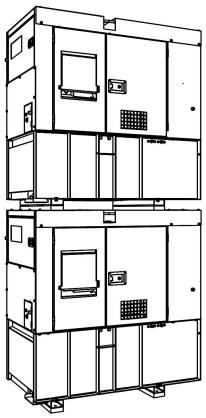

12. Troubleshooting

WARNING : ELECTRIC SHOCK/INJURY

- Do not touch output terminals or internal electric parts while the generator is operating.
- Do not open the check door during operation. Be careful of pinching or catching of moving parts such as the cooling fan and fan belt.
- Always be sure to stop the engine and remove the engine key when performing inspection or maintenance.

CAUTION : FIRE

- Never allow flame to come close to the generator.

CAUTION : BURNS

- Do not touch the engine and muffler after stopping the engine as they are still hot.

Inspect this generator when operation is poor to determine the fault/malfunction. Request the authorized distributor where the generator was purchased to perform maintenance if you cannot find any faults/malfunctions during inspection.

Problem		Suspected cause	Action
Engine does not start	Starter motor does not drive or speed is low	1. Battery output is weak 2. Battery is deteriorated 3. Battery terminal is OFF or loose 4. Battery terminal is corroded 5. Starter switch or relay is defective 6. Starter motor is defective 7. ECU (Engine Controller) is defective	1. Check battery fluid or charge 2. Replace Battery 3. Fix/Tighten terminal 4. Clean terminal 5. Ask our distributor to repair 6. Ask our distributor to repair 7. Ask our distributor to repair
	Starter motor drives but engine does not start	1. Fuel is insufficient 2. Fuel filter is clogged 3. Gauze filter is clogged 4. Water is interfused in fuel line 5. Air is interfused in fuel line 6. Fuel pump defective 7. Emergency operation/Fault detection	1. Add fuel 2. Clean/Replace fuel filter 3. Clean/Replace gauze filter 4. Drain water in water separator, fuel filter or fuel tank 5. Extract the air 6-1. Check/Replace fuse 6-2. Check/Replace fuel pump 7. Ask our distributor to repair
	<Ambient temperature falls down below zero>	1. Fuel is frozen 2. Water in fuel line is frozen 3. Pre-heater is defective	1. Use winterized fuel 2. Drain water in fuel line 3. Ask our distributor to repair
Engine starts but stalls immediately		1. Fuel filter is clogged 2. Gauze filter is clogged 3. Water is interfused in fuel line 4. Air is interfused in fuel line 5. Air filter element is clogged 6. Lubricant oil is insufficient 7. Emergency operation/Fault detection	1. Clean/Replace fuel filter 2. Clean/Replace gauze filter 3. Drain water in water separator, fuel filter or fuel tank 4. Extract the air 5. Check/Replace air filter element 6. Add lubricant oil 7. Ask our distributor to repair
Engine oil pressure is low		1. Lubricant oil is insufficient 2. Oil filter is clogged 3. Oil Pressure switch is defective 4. Oil pressure meter is defective 5. Wrong oil is used	1. Add lubricant oil 2. Replace oil filter 3. Ask our distributor to repair 4. Ask our distributor to repair 5. Change to proper kind and viscosity oil
Overheated		1. Engine thermostat is defective 2. Water temp sensor is defective 3. Water temp meter is defective 4. Fan belt tension is weak 5. Coolant is insufficient 6. Radiator core is clogged	1. Ask our distributor to repair 2. Ask our distributor to repair 3. Ask our distributor to repair 4. Check/Adjust fan belt 5. Check/Add coolant 6. Clean radiator core
Black smoke comes out from Muffler		1. Air filter element is clogged 2. Fuel injection nozzle is defective 3. Improper fuel is used	1. Check/Change air filter element 2. Ask our distributor to repair 3. Change to clean fuel

White smoke comes out from Muffler	1. Too much or too little oil to cylinder 2. Water is interfused in fuel line 3. Fuel injection nozzle is defective 4. Coolant temperature is too low 5. Engine thermostat is defective	1. Ask our distributor to repair 2. Drain water in water separator, fuel filter or fuel tank 3. Ask our distributor to repair 4. Warm-up driving is needed 5. Ask our distributor to repair
Pointer (hand) does not move in voltage meter	1. Voltage meter is defective 2. AVR is defective 3. Disconnected circuit, loose terminal or departed 4. Initial exciter is defective 5. Alternator is defective 6. AVR protective device operation	1. Ask our distributor to repair 2. Ask our distributor to repair 3. Ask our distributor to repair 4. Ask our distributor to repair 5. Ask our distributor to repair 6. Replace AVR fuse
Pointer (hand) does not goes up to the rated voltage	1. Voltage meter is defective 2. AVR is defective 3. Voltage regulator dial is defective	1. Ask our distributor to repair 2. Ask our distributor to repair 3. Ask our distributor to repair
Pointer exceeds the rated voltage	1. Voltage meter is defective 2. AVR is defective 3. Improper load cable connection 4. Voltage switch is set to 480 V.	1. Ask our distributor to repair 2. Ask our distributor to repair 3. Correctly set the connection location to the output terminal. 4. Set the voltage switch to 480 V.
The voltage drops drastically when connecting to load	1. AVR is defective 2. Unbalanced loads sharing to each terminal 3. The current of the used equipment exceeds the rated current. 4. Over load 5. AVR protective device operation	1. Ask our distributor to repair 2. Balance the loads sharing to each terminal 3. Change to a device with an available capacity. 4. Decrease the loads to meet the rated output 5. Replace AVR fuse
Cannot turn the breaker to ON	1. The Main breaker positions at between ON and OFF 2. Short circuit on the load	1. Once turning the lever to OFF, turn it to ON 2. Check the load circuit

13. Generator Circuit Diagram

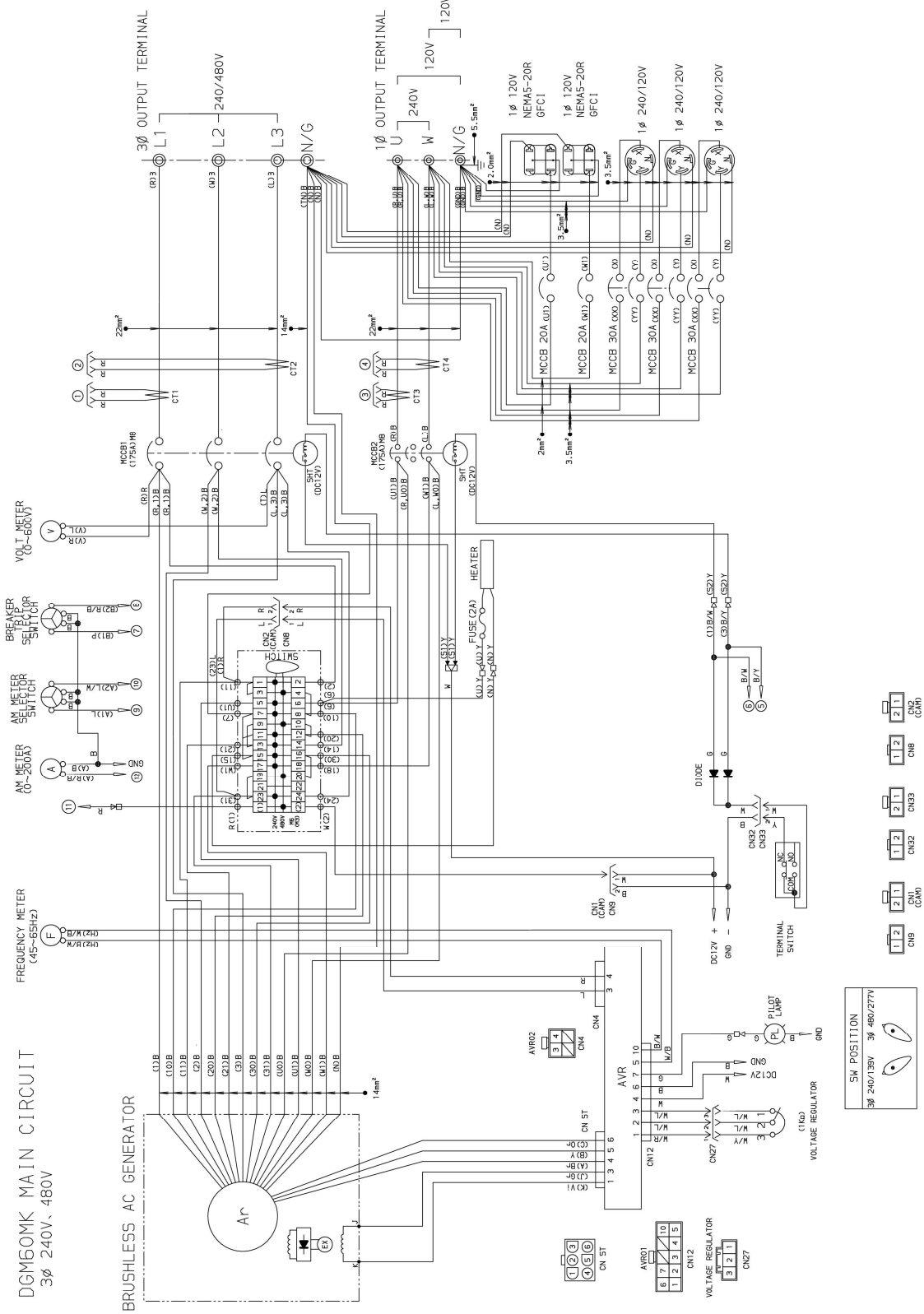

14. Engine Electrical Circuit Diagram

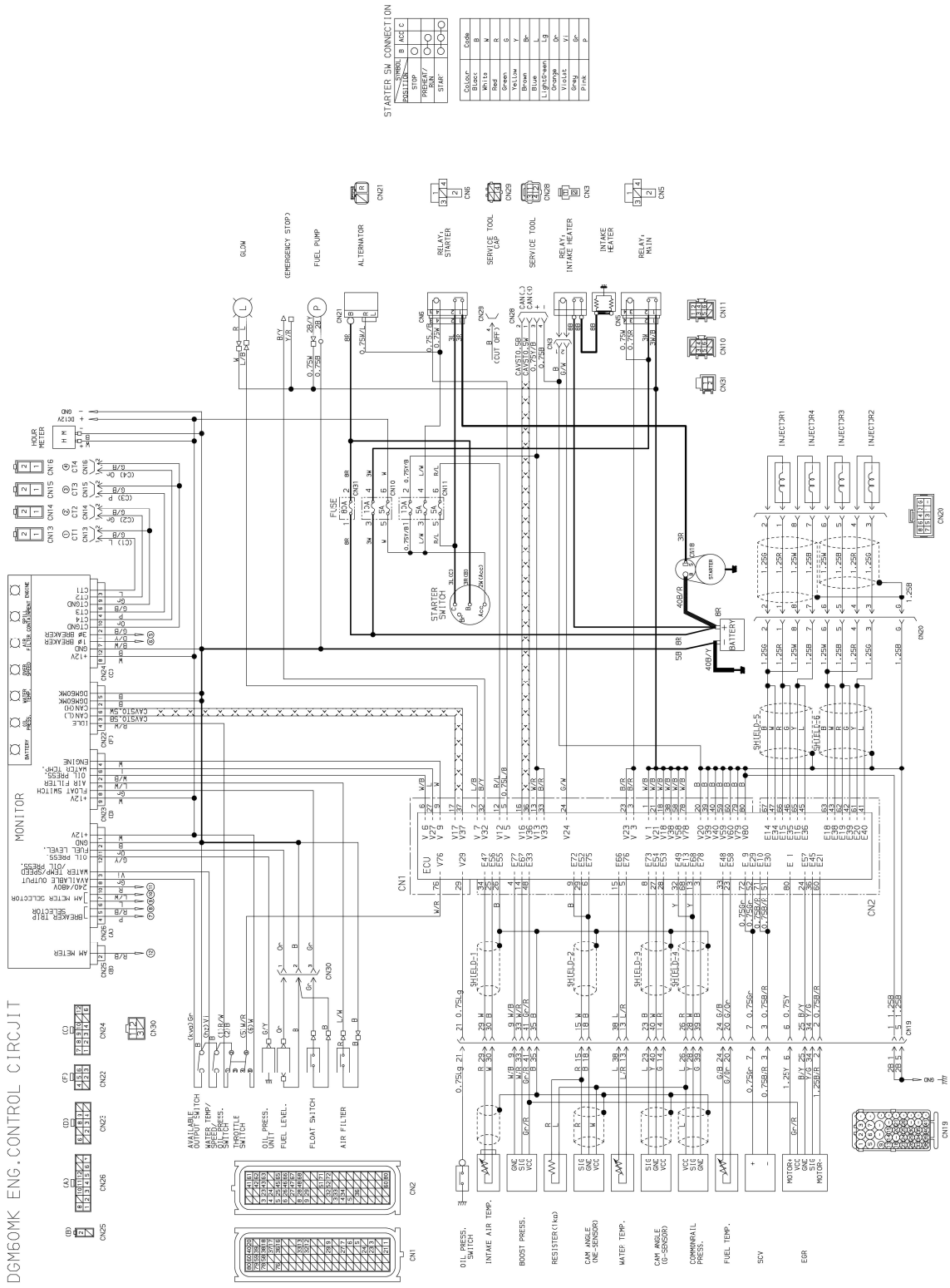

YAMABIKO CORPORATION
7-2 SUEHIROCHO 1-CHOME, OHME, TOKYO 198-8760, JAPAN
PHONE: 81-428-32-6118. FAX: 81-428-32-6145.

shindaiwa®

©2011 YAMABIKO CORPORATION

Printed in Japan